SST Feedthrough

SST Standard Feedthrough Specifications

Voltage: to 30 kV

Current: to 1000 Amp

Temperature: -269˚C to 450˚C

Internal Pressure: 1 x 10^{-10} Torr up to 3000 PSIG

RF Feedthroughs: see page 15.

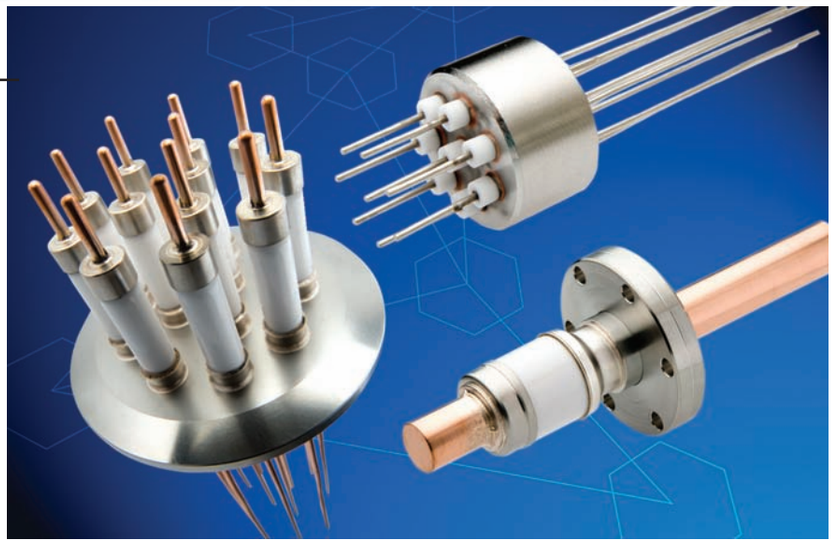

These are just a few examples of SST standard feedthroughs. Contact SST for your modified or custom feedthrough requirements. For a complete library of feedthrough drawings and specifications as well as other SST parts, visit **www.solidsealing/parts**

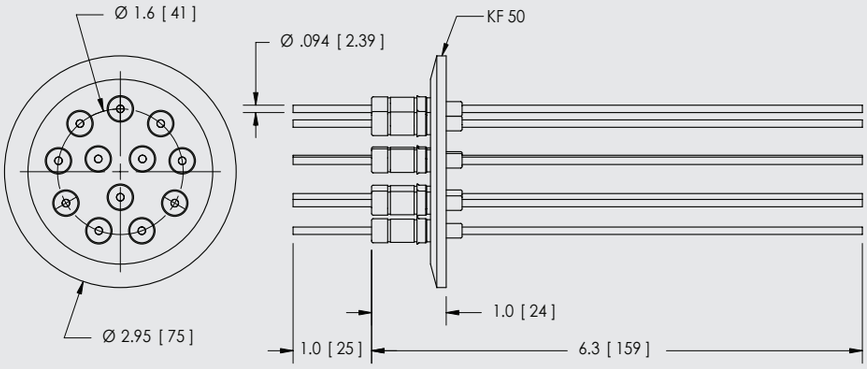

SST Part #	CONDUCTOR DIA.	NO. OF CONDUCTORS	VOLTAGE	CURRENT	CONDUCTOR MATERIAL	INSTALLATION	LIST PRICE
FA12692	0.094	12 Pin	5kV	55 Amp	Copper	KF50	$355.00

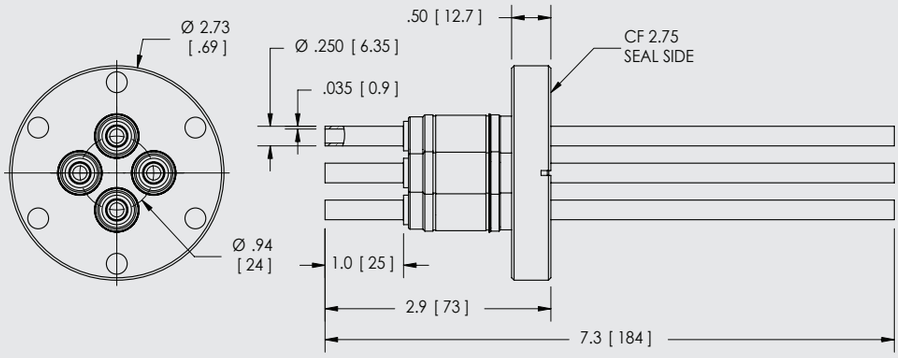

SST Part #	CONDUCTOR DIA.	NO. OF CONDUCTORS	VOLTAGE	CURRENT	CONDUCTOR MATERIAL	INSTALLATION	LIST PRICE
FA14463	0.250	4 Pin	12kV		Copper Tube	CF2.75	$275.00

Tel: (518) 266-6017 / Fax: (518) 266-6013 / info@solidsealing.com
All dimensions are in inches [mm]. Leak rate <1 x 10^{-10} atm-cc/sec (He)

.032 Conductor Diameter Feedthroughs

SST Part #	CONDUCTOR DIA.	NO. OF CONDUCTORS	VOLTAGE	CURRENT	CONDUCTOR MATERIAL	INSTALLATION	LIST PRICE
FA13481	0.032	1 Pin	1kV	16 Amp	Copper	Weld	$25
FA13481-02	0.032	1 Pin	1kV	8.5 Amp	Molybdenum	Weld	$25
FA13481-03	0.032	1 Pin	1kV	5 Amp	Nickel	Weld	$25
FA13481-04	0.032	1 Pin	1kV	1.1 Amp	304 Stn. Stl.	Weld	$25
		2 PIN					
FA10440	0.032	2 Pin	2kV	16 Amp	Copper	Weld	$60
FA11638	0.032	2 Pin	2kV	16 Amp	Copper	CF1.33	$100
FA11637	0.032	2 Pin	2kV	16 Amp	Copper	KF16	$100
FA10440-02	0.032	2 Pin	2kV	8.5 Amp	Molybdenum	Weld	$60
FA11638-02	0.032	2 Pin	2kV	8.5 Amp	Molybdenum	CF1.33	$100
FA11637-02	0.032	2 Pin	2kV	8.5 Amp	Molybdenum	KF16	$100
FA10440-03	0.032	2 Pin	2kV	5 Amp	Nickel	Weld	$60
FA11638-03	0.032	2 Pin	2kV	5 Amp	Nickel	CF1.33	$100
FA11637-03	0.032	2 Pin	2kV	5 Amp	Nickel	KF16	$100
FA10440-04	0.032	2 Pin	2kV	1.1 Amp	304 Stn. Stl.	Weld	$60
FA11638-04	0.032	2 Pin	2kV	1.1 Amp	304 Stn. Stl.	CF1.33	$100
FA11637-04	0.032	2 Pin	2kV	1.1 Amp	304 Stn. Stl.	KF16	$100
		4 PIN					
FA10443	0.032	4 Pin	2kV	16 Amp	Copper	Weld	$72
FA11640	0.032	4 Pin	2kV	16 Amp	Copper	CF1.33	$112
FA11639	0.032	4 Pin	2kV	16 Amp	Copper	KF16	$112
FA10443-02	0.032	4 Pin	2kV	8.5 Amp	Molybdenum	Weld	$72
FA11640-02	0.032	4 Pin	2kV	8.5 Amp	Molybdenum	CF1.33	$112
FA11639-02	0.032	4 Pin	2kV	8.5 Amp	Molybdenum	KF16	$112
FA10443-03	0.032	4 Pin	2kV	5 Amp	Nickel	Weld	$72
FA11640-03	0.032	4 Pin	2kV	5 Amp	Nickel	CF1.33	$112
FA11639-03	0.032	4 Pin	2kV	5 Amp	Nickel	KF16	$112
FA10443-04	0.032	4 Pin	2kV	1.1 Amp	304 Stn. Stl.	Weld	$72
FA11640-04	0.032	4 Pin	2kV	1.1 Amp	304 Stn. Stl.	CF1.33	$112
FA11639-04	0.032	4 Pin	2kV	1.1 Amp	304 Stn. Stl.	KF16	$112
		8 PIN					
FA10445	0.032	8 Pin	1.5kV	16 Amp	Copper	Weld	$100
FA11642	0.032	8 Pin	1.5kV	16 Amp	Copper	CF1.33	$140
FA11641	0.032	8 Pin	1.5kV	16 Amp	Copper	KF16	$140
FA10445-02	0.032	8 Pin	1.5kV	8.5 Amp	Molybdenum	Weld	$100
FA11642-02	0.032	8 Pin	1.5kV	8.5 Amp	Molybdenum	CF1.33	$140
FA11641-02	0.032	8 Pin	1.5kV	8.5 Amp	Molybdenum	KF16	$140
FA10445-03	0.032	8 Pin	1.5kV	5 Amp	Nickel	Weld	$100
FA11642-03	0.032	8 Pin	1.5kV	5 Amp	Nickel	CF1.33	$140

Feedthrough

.032 Conductor Diameter Feedthroughs - continued

SST Part #	CONDUCTOR DIA.	NO. OF CONDUCTORS	VOLTAGE	CURRENT	CONDUCTOR MATERIAL	INSTALLATION	LIST PRICE
FA11641-03	0.032	8 Pin	1.5kV	5 Amp	Nickel	KF16	$140
FA10445-04	0.032	8 Pin	1.5kV	1.1 Amp	304 Stn. Stl.	Weld	$100
FA11642-04	0.032	8 Pin	1.5kV	1.1 Amp	304 Stn. Stl.	CF1.33	$140
FA11641-04	0.032	8 Pin	1.5kV	1.1 Amp	304 Stn. Stl.	KF16	$140

.042 Conductor Diameter Feedthroughs

FA13571	0.042	1 Pin	500V	11.5 Amp	Molybdenum	Weld	$25
FA12231	0.042	1 Pin	500V	-	Kovar® Tube	Weld	$25

.050 Conductor Diameter Feedthroughs

FA10352	0.050	1 Pin	2kV	27 Amp	Copper	Weld	$20
FA10352-02	0.050	1 Pin	2kV	13.5 Amp	Molybdenum	Weld	$20
FA10352-03	0.050	1 Pin	2kV	8.2 Amp	Nickel	Weld	$20
FA10352-04	0.050	1 Pin	2kV	1.8 Amp	304 Stn. Stl.	Weld	$20
FA10351	0.050	1 Pin	5kV	27 Amp	Copper	Weld	$30
FA10490	0.050	1 Pin	5kV	27 Amp	Copper	NPT 3/8	$85
FA10351-02	0.050	1 Pin	5kV	13.5 Amp	Molybdenum	Weld	$30
FA10490-02	0.050	1 Pin	5kV	13.5 Amp	Molybdenum	NPT .3/8	$85
FA10351-03	0.050	1 Pin	5kV	8.2 Amp	Nickel	Weld	$30
FA10490-03	0.050	1 Pin	5kV	8.2 Amp	Nickel	NPT .3/8	$85
FA10351-04	0.050	1 Pin	5kV	1.8 Amp	304 Stn. Stl.	Weld	$30
FA10490-04	0.050	1 Pin	5kV	1.8 Amp	304 Stn. Stl.	NPT 3/8	$85
		2 PIN					
FA10594	0.050	2 Pin	3kV	27 Amp	Copper	Weld	$45
FA11644	0.050	2 Pin	3kV	27 Amp	Copper	CF1.33	$85
FA11643	0.050	2 Pin	3kV	27 Amp	Copper	KF16	$85
FA10594-02	0.050	2 Pin	3kV	13.5 Amp	Molybdenum	Weld	$45
FA11644-02	0.050	2 Pin	3kV	13.5 Amp	Molybdenum	CF1.33	$85
FA11643-02	0.050	2 Pin	3kV	13.5 Amp	Molybdenum	KF16	$85
FA10594-03	0.050	2 Pin	3kV	8.2 Amp	Nickel	Weld	$45
FA11644-03	0.050	2 Pin	3kV	8.2 Amp	Nickel	CF1.33	$85
FA11643-03	0.050	2 Pin	3kV	8.2 Amp	Nickel	KF16	$85
FA10594-04	0.050	2 Pin	3kV	1.8 Amp	304 Stn. Stl.	Weld	$45
FA11644-04	0.050	2 Pin	3kV	1.8 Amp	304 Stn. Stl.	CF1.33	$85
FA11643-04	0.050	2 Pin	3kV	1.8 Amp	304 Stn. Stl.	KF16	$85
FA10598	0.050	2 Pin	6kV	27 Amp	Copper	Weld	$65
FA11650	0.050	2 Pin	6kV	27 Amp	Copper	CF1.33	$105

Tel: (518) 266-6017 / Fax: (518) 266-6013 / info@solidsealing.com
All dimensions are in inches [mm]. Leak rate <1 x 10^{-10} atm-cc/sec (He)

.050 Conductor Diameter Feedthroughs - continued

SST Part #	CONDUCTOR DIA.	NO. OF CONDUCTORS	VOLTAGE	CURRENT	CONDUCTOR MATERIAL	INSTALLATION	LIST PRICE
FA11647	0.050	2 Pin	6kV	27 Amp	Copper	KF16	$105
FA10598-02	0.050	2 Pin	6kV	13.5 Amp	Molybdenum	Weld	$65
FA11650-02	0.050	2 Pin	6kV	13.5 Amp	Molybdenum	CF1.33	$105
FA11647-02	0.050	2 Pin	6kV	13.5 Amp	Molybdenum	KF16	$105
FA10598-03	0.050	2 Pin	6kV	8.2 Amp	Nickel	Weld	$65
FA11650-03	0.050	2 Pin	6kV	8.2 Amp	Nickel	CF1.33	$105
FA11647-03	0.050	2 Pin	6kV	8.2 Amp	Nickel	KF16	$105
FA10598-04	0.050	2 Pin	6kV	1.8 Amp	304 Stn. Stl.	Weld	$65
FA11650-04	0.050	2 Pin	6kV	1.8 Amp	304 Stn. Stl.	CF1.33	$105
FA11647-04	0.050	2 Pin	6kV	1.8 Amp	304 Stn. Stl.	KF16	$105
		4 PIN					
FA10593	0.050	4 Pin	3kV	27 Amp	Copper	Weld	$70
FA11646	0.050	4 Pin	3kV	27 Amp	Copper	CF1.33	$110
FA11645	0.050	4 Pin	3kV	27 Amp	Copper	KF16	$110
FA10593-02	0.050	4 Pin	3kV	13.5 Amp	Molybdenum	Weld	$70
FA11646-02	0.050	4 Pin	3kV	13.5 Amp	Molybdenum	CF1.33	$110
FA11645-02	0.050	4 Pin	3kV	13.5 Amp	Molybdenum	KF16	$110
FA10593-03	0.050	4 Pin	3kV	8.2 Amp	Nickel	Weld	$70
FA11646-03	0.050	4 Pin	3kV	8.2 Amp	Nickel	CF1.33	$110
FA11645-03	0.050	4 Pin	3kV	8.2 Amp	Nickel	KF16	$110
FA10593-04	0.050	4 Pin	3kV	1.8 Amp	304 Stn. Stl.	Weld	$70
FA11646-04	0.050	4 Pin	3kV	1.8 Amp	304 Stn. Stl.	CF1.33	$110
FA11645-04	0.050	4 Pin	3kV	1.8 Amp	304 Stn. Stl.	KF16	$110
FA10597	0.050	4 Pin	6kV	27 Amp	Copper	Weld	$78
FA11648	0.050	4 Pin	6kV	27 Amp	Copper	CF1.33	$118
FA11649	0.050	4 Pin	6kV	27 Amp	Copper	KF16	$118
FA10597-02	0.050	4 Pin	6kV	13.5 Amp	Molybdenum	Weld	$78
FA11648-02	0.050	4 Pin	6kV	13.5 Amp	Molybdenum	CF1.33	$118
FA11649-02	0.050	4 Pin	6kV	13.5 Amp	Molybdenum	KF16	$118
FA10597-03	0.050	4 Pin	6kV	8.2 Amp	Nickel	Weld	$78
FA11648-03	0.050	4 Pin	6kV	8.2 Amp	Nickel	CF1.33	$118
FA11649-03	0.050	4 Pin	6kV	8.2 Amp	Nickel	KF16	$118
FA10597-04	0.050	4 Pin	6kV	1.8 Amp	304 Stn. Stl.	Weld	$78
FA11648-04	0.050	4 Pin	6kV	1.8 Amp	304 Stn. Stl.	CF1.33	$118
FA11649-04	0.050	4 Pin	6kV	1.8 Amp	304 Stn. Stl.	KF16	$118

Feedthrough

.062 Conductor Diameter Feedthroughs

SST Part #	CONDUCTOR DIA.	NO. OF CONDUCTORS	VOLTAGE	CURRENT	CONDUCTOR MATERIAL	INSTALLATION	LIST PRICE
FA14252	0.062	4 Pin	5kV	4.8 Amp	Alumel®	Weld	$130
FA14257	0.062	4 Pin	5kV	4.8 Amp	Alumel®	CF1.33	$155
FA13325	0.062	4 Pin	5kV	4.8 Amp	Alumel®	CF2.75	$175
FA14262	0.062	4 Pin	5kV	4.8 Amp	Alumel®	KF16	$155
		6 PIN					
FA12406	0.062	6 Pin	5kV	4.8 Amp	Alumel®	Weld	$150
FA14258	0.062	6 Pin	5kV	4.8 Amp	Alumel®	CF1.33	$175
FA14260	0.062	6 Pin	5kV	4.8 Amp	Alumel®	CF2.75	$195
FA14263	0.062	6 Pin	5kV	4.8 Amp	Alumel®	KF16	$175
		10 PIN					
FA14254	0.062	10 Pin	2kV	4.8 Amp	Alumel®	Weld	$170
FA14259	0.062	10 Pin	2kV	4.8 Amp	Alumel®	CF1.33	$195
FA14261	0.062	10 Pin	2kV	4.8 Amp	Alumel®	CF2.75	$215
FA13863	0.062	10 Pin	2kV	4.8 Amp	Alumel®	KF16	$195

.080 Diameter - Conductorless

FA11181	Accepts .080 dia. conductor	1 Pin w/8-32 thread	5kV			Weld	$40

.094 Conductor Diameter Feedthroughs

FA10700	0.094	1 Pin	5kV	55 Amp	Copper	Weld	$25
FA11135	0.094	1 Pin	5kV	55 Amp	Copper	CF1.33	$65
FA13324	0.094	1 Pin	5kV	55 Amp	Copper	KF16	$65
FA10700-02	0.094	1 Pin	5kV	28 Amp	Molybdenum	Weld	$25
FA11135-02	0.094	1 Pin	5kV	28 Amp	Molybdenum	CF1.33	$80
FA13324-02	0.094	1 Pin	5kV	28 Amp	Molybdenum	KF16	$65
FA10700-03	0.094	1 Pin	5kV	16.5 Amp	Nickel	Weld	$25
FA11135-03	0.094	1 Pin	5kV	16.5 Amp	Nickel	CF1.33	$65
FA13324-03	0.094	1 Pin	5kV	16.5 Amp	Nickel	KF16	$65
FA10700-04	0.094	1 Pin	5kV	3.6 Amp	304 Stn. Stl.	Weld	$25
FA11135-04	0.094	1 Pin	5kV	3.6 Amp	304 Stn. Stl.	CF1.33	$65
FA13324-04	0.094	1 Pin	5kV	3.6 Amp	304 Stn. Stl.	KF16	$65

*(For use with High Voltage Plugs in order to achieve 10kV) (See page 17)

FA11134	0.094	1 Pin	10kV*	26 Amp	Copper	Weld	$30
FA11138	0.094	1 Pin	10kV*	26 Amp	Copper	CF1.33	$70
FA14397	0.094	1 Pin	10kV*	26 Amp	Copper	KF16	$70
FA11134-02	0.094	1 Pin	10kV*	26 Amp	Molybdenum	Weld	$30
FA11138-02	0.094	1 Pin	10kV*	26 Amp	Molybdenum	CF1.33	$70
FA14397-02	0.094	1 Pin	10kV*	26 Amp	Molybdenum	KF16	$70

Tel: (518) 266-6017 / Fax: (518) 266-6013 / info@solidsealing.com
All dimensions are in inches [mm]. Leak rate <1 x 10^{-10} atm-cc/sec (He)

.094 Conductor Diameter Feedthroughs - continued

*(For use with High Voltage Plugs in order to achieve 10kV) (See page 17)

SST Part #	CONDUCTOR DIA.	NO. OF CONDUCTORS	VOLTAGE	CURRENT	CONDUCTOR MATERIAL	INSTALLATION	LIST PRICE
FA11134-03	0.094	1 Pin	10kV*	16.5 Amp	Nickel	Weld	$30
FA11138-03	0.094	1 Pin	10kV*	16.5 Amp	Nickel	CF1.33	$70
FA14397-03	0.094	1 Pin	10kV*	16.5 Amp	Nickel	KF16	$70
FA11134-04	0.094	1 Pin	10kV*	3.6 Amp	304 Stn. Stl.	Weld	$30
FA11138-04	0.094	1 Pin	10kV*	3.6 Amp	304 Stn. Stl.	CF1.33	$70
FA14397-04	0.094	1 Pin	10kV*	3.6 Amp	304 Stn. Stl.	KF16	$70
FA10701	0.094	1 Pin	14kV	55 Amp	Copper	Weld	$30
FA10721	0.094	1 Pin	14kV	55 Amp	Copper	CF1.33	$100
FA14410	0.094	1 Pin	14kV	55 Amp	Copper	KF16	$100
FA10701-02	0.094	1 Pin	14kV	28 Amp	Molybdenum	Weld	$30
FA10721-02	0.094	1 Pin	14kV	28 Amp	Molybdenum	CF1.33	$100
FA14410-02	0.094	1 Pin	14kV	28 Amp	Molybdenum	KF16	$100
FA10701 -03	0.094	1 Pin	14kV	16.5 Amp	Nickel	Weld	$30
FA10721-03	0.094	1 Pin	14kV	16.5 Amp	Nickel	CF1.33	$100
FA14410-03	0.094	1 Pin	14kV	16.5 Amp	Nickel	KF16	$100
FA10701-04	0.094	1 Pin	14kV	3.6 Amp	304 Stn. Stl.	Weld	$30
FA10721-04	0.094	1 Pin	14kV	3.6 Amp	304 Stn. Stl.	CF1.33	$100
FA14410-04	0.094	1 Pin	14kV	3.6 Amp	304 Stn. Stl.	KF16	$100
*(For use with High Voltage Plugs in order to achieve 20kV) (See page 17)							
FA10720	0.094	1 Pin	20kV*	26 Amp	Copper	Weld	$35
FA10722	0.094	1 Pin	20kV*	26 Amp	Copper	CF1.33	$105
FA14411	0.094	1 Pin	20kV*	26 Amp	Copper	KF16	$105
FA10720-02	0.094	1 Pin	20kV*	26 Amp	Molybdenum	Weld	$35
FA10722-02	0.094	1 Pin	20kV*	26 Amp	Molybdenum	CF1.33	$105
FA14411-02	0.094	1 Pin	20kV*	26 Amp	Molybdenum	KF16	$105
FA10720-03	0.094	1 Pin	20kV*	16.5 Amp	Nickel	Weld	$35
FA14411-03	0.094	1 Pin	20kV*	16.5 Amp	Nickel	KF16	$105
FA10720-04	0.094	1 Pin	20kV*	3.6 Amp	304 Stn. Stl.	Weld	$35
FA10722-03	0.094	1 Pin	20kV*	16.5 Amp	Nickel	CF1.33	$105
FA14411-04	0.094	1 Pin	20kV*	3.6 Amp	304 Stn. Stl.	KF16	$105
FA10722-04	0.094	1 Pin	20kV*	3.6 Amp	304 Stn. Stl.	CF1.33	$105
FA10309-02	0.094	1 Pin	30kV	55 Amp	Copper	Weld	$145
FA12140-02	0.094	1 Pin	30kV	55 Amp	Copper	CF2.75	$200
FA13900-02	0.094	1 Pin	30kV	55 Amp	Copper	KF40	$200
FA10309-03	0.094	1 Pin	30kV	16.5 Amp	Nickel	Weld	$145
FA12140-03	0.094	1 Pin	30kV	16.5 Amp	Nickel	CF2.75	$200
FA13900-03	0.094	1 Pin	30kV	16.5 Amp	Nickel	KF40	$200

Feedthrough

.094 Conductor Diameter Feedthroughs - continued

SST Part #	CONDUCTOR DIA.	NO. OF CONDUCTORS	VOLTAGE	CURRENT	CONDUCTOR MATERIAL	INSTALLATION	LIST PRICE
FA10309	0.094	1 Pin	30kV	3.6 Amp	304 Stn. Stl.	Weld	$145
FA12140	0.094	1 Pin	30kV	3.6 Amp	304 Stn. Stl.	CF2.75	$200
FA13900	0.094	1 Pin	30kV	3.6 Amp	304 Stn. Stl.	KF40	$200
		2 PIN					
FA11666	0.094	2 Pin	5kV	55 Amp	Copper	CF1.33	$110
FA13495	0.094	2 Pin	5kV	55 Amp	Copper	KF40	$120
FA11666-02	0.094	2 Pin	5kV	28 Amp	Molybdenum	CF1.33	$110
FA13495-02	0.094	2 Pin	5kV	28 Amp	Molybdenum	KF40	$120
FA11666-03	0.094	2 Pin	5kV	16.5 Amp	Nickel	CF1.33	$110
FA13495-03	0.094	2 Pin	5kV	16.5 Amp	Nickel	KF40	$120
FA11666-04	0.094	2 Pin	5kV	3.6 Amp	304 Stn. Stl.	CF1.33	$110
FA13495-04	0.094	2 Pin	5kV	3.6 Amp	304 Stn. Stl.	KF40	$120
*(For use with High Voltage Plugs in order to achieve 10kV) (See page 17)							
FA11668	0.094	2 Pin	10kV*	26 Amp	Copper	CF2.75	$125
FA14401	0.094	2 Pin	10kV*	26 Amp	Copper	KF40	$125
FA11668-02	0.094	2 Pin	10kV*	26 Amp	Molybdenum	CF 2.75	$125
FA14401-02	0.094	2 Pin	10kV*	26 Amp	Molybdenum	KF40	$125
FA11668-03	0.094	2 Pin	10kV*	16.5 Amp	Nickel	CF2.75	$125
FA14401-03	0.094	2 Pin	10kV*	16.5 Amp	Nickel	KF40	$125
FA14401-04	0.094	2 Pin	10kV*	3.6 Amp	304 Stn. Stl.	KF40	$125
FA11668-04	0.094	2 Pin	10kV*	3.6 Amp	304 Stn. Stl.	CF2.75	$125
FA13275	0.094	2 Pin	12kV	55 Amp	Copper	CF1.33	$150
FA13275-02	0.094	2 Pin	12kV	28 Amp	Molybdenum	CF1.33	$150
FA13275-03	0.094	2 Pin	12kV	16.5 Amp	Nickel	CF1.33	$150
FA13275-04	0.094	2 Pin	12kV	3.6 Amp	304 Stn. Stl.	CF1.33	$150
FA14412	0.094	2 Pin	14kV	55 Amp	Copper	KF40	$155
FA14412-02	0.094	2 Pin	14kV	28 Amp	Molybdenum	KF40	$155
FA14412-03	0.094	2 Pin	14kV	16.5 Amp	Nickel	KF40	$155
FA14412-04	0.094	2 Pin	14kV	3.6 Amp	304 Stn. Stl.	KF40	$155
*(For use with High Voltage Plugs in order to achieve 20kV ratings)(See page 17)							
FA14055	0.094	2 Pin	20kV*	26 Amp	Copper	CF2.75	$160
FA13906	0.094	2 Pin	20kV*	26 Amp	Copper	KF40	$160
FA14055-02	0.094	2 Pin	20kV*	26 Amp	Molybdenum	CF2.75	$160
FA13906-02	0.094	2 Pin	20kV*	26 Amp	Molybdenum	KF40	$160
FA14055-03	0.094	2 Pin	20kV*	16.5 Amp	Nickel	CF2.75	$160

Tel: (518) 266-6017 / Fax: (518) 266-6013 / info@solidsealing.com
All dimensions are in inches [mm]. Leak rate <1 x 10^{-10} atm-cc/sec (He)

.094 Conductor Diameter Feedthroughs - continued

SST Part #	CONDUCTOR DIA.	NO. OF CONDUCTORS	VOLTAGE	CURRENT	CONDUCTOR MATERIAL	INSTALLATION	LIST PRICE
FA13906-03	0.094	2 Pin	20kV*	16.5 Amp	Nickel	KF40	$160
FA14055-04	0.094	2 Pin	20kV*	3.6 Amp	304 Stn. Stl.	CF2.75	$160
FA13906-04	0.094	2 Pin	20kV*	3.6 Amp	304 Stn. Stl.	KF40	$160
		3 PIN					
FA11669	0.094	3 Pin	5kV	55 Amp	Copper	CF1.33	$138
FA11670	0.094	3 Pin	5kV	55 Amp	Copper	CF2.75	$135
FA14924	0.094	3 Pin	5kV	55 Amp	Copper	KF40	$135
FA11669-02	0.094	3 Pin	5kV	28 Amp	Molybdenum	CF1.33	$138
FA11670-02	0.094	3 Pin	5kV	28 Amp	Molybdenum	CF2.75	$135
FA14924-02	0.094	3 Pin	5kV	28 Amp	Molybdenum	KF40	$135
FA11669-03	0.094	3 Pin	5kV	16.5 Amp	Nickel	CF1.33	$138
FA11670-03	0.094	3 Pin	5kV	16.5 Amp	Nickel	CF2.75	$135
FA14924-03	0.094	3 Pin	5kV	16.5 Amp	Nickel	KF40	$135
FA11669-04	0.094	3 Pin	5kV	3.6 Amp	304 Stn. Stl.	CF1.33	$138
FA11670-04	0.094	3 Pin	5kV	3.6 Amp	304 Stn. Stl.	CF2.75	$135
FA14924-04	0.094	3 Pin	5kV	3.6 Amp	304 Stn. Stl.	KF40	$135
*(For use with High Voltage Plugs in order to achieve 10kV ratings) (See page 17)							
FA11671	0.094	3 Pin	10kV*	26 Amp	Copper	CF2.75	$145
FA14925	0.094	3 Pin	10kV*	26 Amp	Copper	KF40	$145
FA11671-02	0.094	3 Pin	10kV*	26 Amp	Molybdenum	CF2.75	$145
FA14925-02	0.094	3 Pin	10kV*	26 Amp	Molybdenum	KF40	$145
FA11671-03	0.094	3 Pin	10kV*	16.5 Amp	Nickel	CF2.75	$145
FA14925-03	0.094	3 Pin	10kV*	16.5 Amp	Nickel	KF40	$145
FA11671-04	0.094	3 Pin	10kV*	3.6 Amp	304 Stn. Stl.	CF2.75	$145
FA14925-04	0.094	3 Pin	10kV*	3.6 Amp	304 Stn. Stl.	KF40	$145
FA14146	0.094	3 Pin	14kV	55 Amp	Copper	CF2.75	$175
FA14146-02	0.094	3 Pin	14kV	28 Amp	Molybdenum	CF2.75	$175
FA14146-03	0.094	3 Pin	14kV	16.5 Amp	Nickel	CF2.75	$175
FA14146-04	0.094	3 Pin	14kV	3.6 Amp	304 Stn. Stl.	CF2.75	$175
*(For use with High Voltage Plugs in order to achieve 20kV ratings) (See page 17)							
FA13385	0.094	3 Pin	20kV*	26 Amp	Copper	CF2.75	$185
FA13907	0.094	3 Pin	20kV*	26 Amp	Copper	KF40	$185
FA13385-02	0.094	3 Pin	20kV*	26 Amp	Molybdenum	CF2.75	$185
FA13907-02	0.094	3 Pin	20kV*	26 Amp	Molybdenum	KF40	$185
FA13385-03	0.094	3 Pin	20kV*	16.5 Amp	Nickel	CF2.75	$185
FA13907-03	0.094	3 Pin	20kV*	16.5 Amp	Nickel	KF40	$185

Feedthrough

.094 Conductor Diameter Feedthroughs - continued

SST Part #	CONDUCTOR DIA.	NO. OF CONDUCTORS	VOLTAGE	CURRENT	CONDUCTOR MATERIAL	INSTALLATION	LIST PRICE
FA13385-04	0.094	3 Pin	20kV*	3.6 Amp	304 Stn. Stl.	CF2.75	$185
FA13907-04	0.094	3 Pin	20kV*	3.6 Amp	304 Stn. Stl.	KF40	$185
		4 PIN					
FA11672	0.094	4 Pin	5kV	55 Amp	Copper	CF2.75	$155
FA12247	0.094	4 Pin	5kV	55 Amp	Copper	KF40	$155
FA11672-02	0.094	4 Pin	5kV	28 Amp	Molybdenum	CF2.75	$155
FA12247-02	0.094	4 Pin	5kV	28 Amp	Molybdenum	KF40	$155
FA11672-03	0.094	4 Pin	5kV	16.5 Amp	Nickel	CF2.75	$155
FA12247-03	0.094	4 Pin	5kV	16.5 Amp	Nickel	KF40	$155
FA11672-04	0.094	4 Pin	5kV	3.6 Amp	304 Stn. Stl.	CF2.75	$155
FA12247-04	0.094	4 Pin	5kV	3.6 Amp	304 Stn. Stl.	KF40	$155
*(For use with High Voltage Plugs in order to achieve 10kV ratings) (See page 17)							
FA11674	0.094	4 Pin	10kV*	26 Amp	Copper	CF2.75	$165
FA13460	0.094	4 Pin	10kV*	26 Amp	Copper	KF40	$165
FA11674-02	0.094	4 Pin	10kV*	26 Amp	Molybdenum	CF2.75	$165
FA13460-02	0.094	4 Pin	10kV*	26 Amp	Molybdenum	KF40	$165
FA11674-03	0.094	4 Pin	10kV*	16.5 Amp	Nickel	CF2.75	$165
FA13460-03	0.094	4 Pin	10kV*	16.5 Amp	Nickel	KF40	$165
FA11674-04	0.094	4 Pin	10kV*	3.6 Amp	304 Stn. Stl.	CF2.75	$165
FA13460-04	0.094	4 Pin	10kV*	3.6 Amp	304 Stn. Stl.	KF40	$165
FA14310	0.094	4 Pin	14kV	55 Amp	Copper	CF2.75	$190
FA11823	0.094	4 Pin	14kV	55 Amp	Copper	KF40	$190
FA14310-02	0.094	4 Pin	14kV	28 Amp	Molybdenum	CF2.75	$190
FA11823-02	0.094	4 Pin	14kV	28 Amp	Molybdenum	KF40	$190
FA14310-03	0.094	4 Pin	14kV	16.5 Amp	Nickel	CF2.75	$190
FA11823-03	0.094	4 Pin	14kV	16.5 Amp	Nickel	KF40	$190
FA14310-04	0.094	4 Pin	14kV	3.6 Amp	304 Stn. Stl.	CF2.75	$190
FA11823-04	0.094	4 Pin	14kV	3.6 Amp	304 Stn. Stl.	KF40	$190
*(For use with High Voltage Plugs in order to achieve 20kV ratings) (See page 17)							
FA14101	0.094	4 Pin	20kV*	26 Amp	Copper	CF2.75	$205
FA13219	0.094	4 Pin	20kV*	26 Amp	Copper	KF40	$205
FA14101-02	0.094	4 Pin	20kV*	26 Amp	Molybdenum	CF2.75	$205
FA13219-02	0.094	4 Pin	20kV*	26 Amp	Molybdenum	KF40	$205
FA14101-03	0.094	4 Pin	20kV*	16.5 Amp	Nickel	CF2.75	$205
FA13219-03	0.094	4 Pin	20kV*	16.5 Amp	Nickel	KF40	$205
FA14101-04	0.094	4 Pin	20kV*	3.6 Amp	304 Stn. Stl.	CF2.75	$205
FA13219-04	0.094	4 Pin	20kV*	3.6 Amp	304 Stn. Stl.	KF40	$205

Tel: (518) 266-6017 / Fax: (518) 266-6013 / info@solidsealing.com
All dimensions are in inches [mm]. Leak rate <1 x 10^{-10} atm-cc/sec (He)

.094 Conductor Diameter Feedthroughs - continued

SST Part #	CONDUCTOR DIA.	NO. OF CONDUCTORS	VOLTAGE	CURRENT	CONDUCTOR MATERIAL	INSTALLATION	LIST PRICE
		8 PIN					
FA13244	0.094	8 Pin	5kV	55 Amp	Copper	CF2.75	$255
FA12691	0.094	8 Pin	5kV	55 Amp	Copper	KF40	$255
FA13244-02	0.094	8 Pin	5kV	28 Amp	Molybdenum	CF2.75	$255
FA12691-02	0.094	8 Pin	5kV	28 Amp	Molybdenum	KF40	$255
FA13244-03	0.094	8 Pin	5kV	16.5 Amp	Nickel	CF2.75	$255
FA12691-03	0.094	8 Pin	5kV	16.5 Amp	Nickel	KF40	$255
FA13244-04	0.094	8 Pin	5kV	3.6 Amp	304 Stn. Stl.	CF2.75	$255
FA12691-04	0.094	8 Pin	5kV	3.6 Amp	304 Stn. Stl.	KF40	$255
*(For use with High Voltage Plugs in order to achieve 20kV ratings) (See page 17)							
FA14313	0.094	8 Pin	10kV*	26 Amp	Copper	CF2.75	$265
FA14234	0.094	8 Pin	10kV*	26 Amp	Copper	KF40	$265
FA14313-02	0.094	8 Pin	10kV*	26 Amp	Molybdenum	CF2.75	$265
FA14234-02	0.094	8 Pin	10kV*	26 Amp	Molybdenum	KF40	$265
FA14313-03	0.094	8 Pin	10kV*	16.5 Amp	Nickel	CF2.75	$265
FA14234-03	0.094	8 Pin	10kV*	16.5 Amp	Nickel	KF40	$265
FA14313-04	0.094	8 Pin	10kV*	3.6 Amp	304 Stn. Stl.	CF2.75	$265
FA14234-04	0.094	8 Pin	10kV*	3.6 Amp	304 Stn. Stl.	KF40	$265
FA13990	0.094	8 Pin	12kV	55 Amp	Copper	CF2.75	$295
FA14926	0.094	8 Pin	12kV	55 Amp	Copper	KF40	$330
FA13990-02	0.094	8 Pin	12kV	28 Amp	Molybdenum	CF2.75	$295
FA14926-02	0.094	8 Pin	12kV	28 Amp	Molybdenum	KF40	$330
FA13990-03	0.094	8 Pin	12kV	16.5 Amp	Nickel	CF2.75	$295
FA14926-03	0.094	8 Pin	12kV	16.5 Amp	Nickel	KF40	$330
FA13990-04	0.094	8 Pin	12kV	3.6 Amp	304 Stn. Stl.	CF2.75	$295
FA14926-04	0.094	8 Pin	12kV	3.6 Amp	304 Stn. Stl.	KF40	$330
*(For use with High Voltage Plugs in order to achieve 20kV ratings) (See page 17)							
FA12633	0.094	8 Pin	20kV*	26 Amp	Copper	CF2.75	$305
FA14928	0.094	8 Pin	20kV*	26 Amp	Copper	KF40	$340
FA12633-02	0.094	8 Pin	20kV*	26 Amp	Molybdenum	CF2.75	$305
FA14928-02	0.094	8 Pin	20kV*	26 Amp	Molybdenum	KF40	$340
FA12633-03	0.094	8 Pin	20kV*	16.5 Amp	Nickel	CF2.75	$305
FA14928-03	0.094	8 Pin	20kV*	16.5 Amp	Nickel	KF40	$340
FA12633-04	0.094	8 Pin	20kV*	3.6 Amp	304 Stn. Stl.	CF2.75	$305
FA14928-04	0.094	8 Pin	20kV*	3.6 Amp	304 Stn. Stl.	KF40	$340

Feedthrough

.094 Conductor Diameter Feedthroughs - continued

SST Part #	CONDUCTOR DIA.	NO. OF CONDUCTORS	VOLTAGE	CURRENT	CONDUCTOR MATERIAL	INSTALLATION	LIST PRICE
		12 PIN					
FA12278	0.094	12 Pin	5kV	55 Amp	Copper	CF2.75	$355
FA13123	0.094	12 Pin	5kV	55 Amp	Copper	CF3.375	$380
FA12692	0.094	12 Pin	5kV	55 Amp	Copper	KF50	$355
FA12278-02	0.094	12 Pin	5kV	28 Amp	Molybdenum	CF2.75	$355
FA13123-02	0.094	12 Pin	5kV	28 Amp	Molybdenum	CF3.375	$380
FA12692-02	0.094	12 Pin	5kV	28 Amp	Molybdenum	KF50	$355
FA12278-03	0.094	12 Pin	5kV	16.5 Amp	Nickel 200	CF2.75	$355
FA13123-03	0.094	12 Pin	5kV	16.5 Amp	Nickel	CF3.375	$380
FA12692-03	0.094	12 Pin	5kV	16.5 Amp	Nickel	KF50	$355
FA12278-04	0.094	12 Pin	5kV	3.6 Amp	304 Stn. Stl.	CF2.75	$355
FA13123-04	0.094	12 Pin	5kV	3.6 Amp	304 Stn. Stl.	CF3.375	$380
FA12692-04	0.094	12 Pin	5kV	3.6 Amp	304 Stn. Stl.	KF50	$355
*(For use with High Voltage Plugs in order to achieve 10kV ratings) (See page 17)							
FA14929	0.094	12 Pin	10kV*	26 Amp	Copper	CF3.375	$390
FA14935	0.094	12 Pin	10kV*	26 Amp	Copper	KF50	$365
FA14929-02	0.094	12 Pin	10kV*	26 Amp	Molybdenum	CF3.375	$390
FA14935-02	0.094	12 Pin	10kV*	26 Amp	Molybdenum	KF50	$365
FA14929-03	0.094	12 Pin	10kV*	16.5 Amp	Nickel	CF3.375	$390
FA14935-03	0.094	12 Pin	10kV*	16.5 Amp	Nickel	KF50	$365
FA14929-04	0.094	12 Pin	10kV*	3.6 Amp	304 Stn. Stl.	CF3.375	$390
FA14935-04	0.094	12 Pin	10kV*	3.6 Amp	304 Stn. Stl.	KF50	$365
FA14467	0.094	12 Pin	12kV	55 Amp	Copper	KF50	$440
FA14467-02	0.094	12 Pin	12kV	28 Amp	Molybdenum	KF50	$440
FA14467-03	0.094	12 Pin	12kV	16.5 Amp	Nickel	KF50	$440
FA14467-04	0.094	12 Pin	12kV	3.6 Amp	304 Stn. Stl.	KF50	$440
*(For use with High Voltage Plugs in order to achieve 20kV ratings) (See page 17)							
FA13103	0.094	12 Pin	20kV*	26 Amp	Copper	CF3.375	$450
FA13086	0.094	12 Pin	20kV*	26 Amp	Copper	KF50	$450
FA13103-02	0.094	12 Pin	20kV*	26 Amp	Molybdenum	CF3.375	$450
FA13086-02	0.094	12 Pin	20kV*	26 Amp	Molybdenum	KF50	$450
FA13103-03	0.094	12 Pin	20kV*	16.5 Amp	Nickel	CF3.375	$450
FA13086-03	0.094	12 Pin	20kV*	16.5 Amp	Nickel	KF50	$450
FA13013-04	0.094	12 Pin	20kV*	3.6 Amp	304 Stn. Stl.	CF3.375	$450
FA13086-04	0.094	12 Pin	20kV*	3.6 Amp	304 Stn. Stl.	KF50	$450

Tel: (518) 266-6017 / Fax: (518) 266-6013 / info@solidsealing.com
All dimensions are in inches [mm]. Leak rate <1 x 10^{-10} atm-cc/sec (He)

.154 Conductor Diameter Feedthroughs

SST Part #	CONDUCTOR DIA.	NO. OF CONDUCTORS	VOLTAGE	CURRENT	CONDUCTOR MATERIAL	INSTALLATION	LIST PRICE
FA10463	0.154	1 Pin	5kV	100 Amp	Copper	Weld	$42
FA13865	0.154	1 Pin	5kV	100 Amp	Copper	CF1.33	$82
FA14577	0.154	1 Pin	5kV	100 Amp	Copper	KF16	$82
FA10463-02	0.154	1 Pin	5kV	50 Amp	Molybdenum	Weld	Contact SST
FA13865-02	0.154	1 Pin	5kV	50 Amp	Molybdenum	CF1.33	Contact SST
FA14577-02	0.154	1 Pin	5kV	50 Amp	Molybdenum	KF16	Contact SST
FA10463-03	0.154	1 Pin	5kV	30 Amp	Nickel	Weld	$42
FA13865-03	0.154	1 Pin	5kV	30 Amp	Nickel	CF1.33	$82
FA14577-03	0.154	1 Pin	5kV	30 Amp	Nickel	KF16	$82
FA10463-04	0.154	1 Pin	5kV	6.5 Amp	304 Stn. Stl.	Weld	$42
FA13865-04	0.154	1 Pin	5kV	6.5 Amp	304 Stn. Stl.	CF1.33	$82
FA14577-04	0.154	1 Pin	5kV	6.5 Amp	304 Stn. Stl.	KF16	$82
		2 PIN					
FA12447	0.154	2 Pin	5kV	100 Amp	Copper	CF2.75	$150
FA12447-02	0.154	2 Pin	5kV	50 Amp	Molybdenum	CF2.75	Contact SST
FA12447-03	0.154	2 Pin	5kV	30 Amp	Nickel	CF2.75	$150
FA12447-04	0.154	2 Pin	5kV	6.5 Amp	304 Stn. Stl.	CF2.75	$150
		4 PIN					
FA12445	0.154	4 Pin	5kV	100 Amp	Copper	CF2.75	$250
FA13248	0.154	4 Pin	5kV	100 Amp	Copper	KF40	$250
FA12445-02	0.154	4 Pin	5kV	50 Amp	Molybdenum	CF2.75	Contact SST
FA13248-02	0.154	4 Pin	5kV	50 Amp	Molybdenum	KF40	Contact SST
FA12445-03	0.154	4 Pin	5kV	30 Amp	Nickel	CF2.75	$250
FA13248-03	0.154	4 Pin	5kV	30 Amp	Nickel	KF40	$250
FA12445-04	0.154	4 Pin	5kV	6.5 Amp	304 Stn. Stl.	CF2.75	$250
FA13248-04	0.154	4 Pin	5kV	6.5 Amp	304 Stn. Stl.	KF40	$250

Feedthrough

.156 Conductor Diameter Feedthroughs

SST Part #	CONDUCTOR DIA.	NO. OF CONDUCTORS	VOLTAGE	CURRENT	CONDUCTOR MATERIAL	INSTALLATION	LIST PRICE
FA12215	0.156	1 Pin	70kV	6.5 Amp	304 Stn. Stl. 13 Thread Stud	Weld	Contact SST

.250 Conductor Diameter Feedthroughs

FA14321	0.250	1 Pin	5kV	185 Amp	Copper	NPT 1/2	$115
FA14321-02	0.250	1 Pin	5kV	93 Amp	Molybdenum	NPT 1/2	Contact SST
FA14321-03	0.250	1 Pin	5kV	56 Amp	Nickel	NPT 1/2	Contact SST
FA14321-04	0.250	1 Pin	5kV	12 Amp	304 Stn. Stl.	NPT 1/2	$115
FA10345	0.250	1 Pin	12kV	185 Amp	Copper	Weld	$45
FA12348	0.250	1 Pin	12kV	185 Amp	Copper	CF1.33	$85
FA12780	0.250	1 Pin	12kV	185 Amp	Copper	CF2.75	$90
FA12106	0.250	1 Pin	12kV	185 Amp	Copper	KF16	$85
FA12336	0.250	1 Pin	12kV	-	Copper Tube	Weld	$55
FA14919	0.250	1 Pin	12kV	-	Copper Tube	CF1.33	$95
FA14326	0.250	1 Pin	12kV	-	Copper Tube	CF2.75	$100
FA14315	0.250	1 Pin	12kV	-	Copper Tube	KF16	$95
FA10345-02	0.250	1 Pin	12kV	93 Amp	Molybdenum	Weld	Contact SST
FA12348-02	0.250	1 Pin	12kV	93 Amp	Molybdenum	CF1.33	Contact SST
FA12780-02	0.250	1 Pin	12kV	93 Amp	Molybdenum	CF2.75	Contact SST
FA12106-02	0.250	1 Pin	12kV	93 Amp	Molybdenum	KF16	Contact SST
FA10345-03	0.250	1 Pin	12kV	56 Amp	Nickel	Weld	Contact SST
FA12348-03	0.250	1 Pin	12kV	56 Amp	Nickel	CF1.33	Contact SST
FA12780-03	0.250	1 Pin	12kV	56 Amp	Nickel	CF2.75	Contact SST
FA12106-03	0.250	1 Pin	12kV	56 Amp	Nickel	KF16	Contact SST
FA10345-04	0.250	1 Pin	12kV	12 Amp	304 Stn. Stl.	Weld	$45
FA12348-04	0.250	1 Pin	12kV	12 Amp	304 Stn. Stl.	CF1.33	$85
FA12780-04	0.250	1 Pin	12kV	12 Amp	304 Stn. Stl.	CF2.75	$90
FA12106-04	0.250	1 Pin	12kV	12 Amp	304 Stn. Stl.	KF16	$85
FA12336-03	0.250	1 Pin	12kV	-	304 Stn. Stl. Tube	Weld	$55
FA14919-02	0.250	1 Pin	12kV	-	304 Stn. Stl. Tube	CF1.33	$95
FA14326-03	0.250	1 Pin	12kV	-	304 Stn. Stl. Tube	CF2.75	$100
FA14315-03	0.250	1 Pin	12kV	-	304 Stn. Stl. Tube	KF16	$95
FA11403	0.250	1 Pin	20kV	185 Amp	Copper	Weld	Contact SST
FA11403-03	0.250	1 Pin	20kV	56 Amp	Nickel	Weld	Contact SST
FA11403-04	0.250	1 Pin	20kV	12 Amp	304 Stn. Stl.	Weld	Contact SST
		2 PIN					
FA13230	0.250	2 Pin	12kV	185 Amp	Copper	CF2.75	$145
FA13128	0.250	2 Pin	12kV	185 Amp	Copper	KF40	$145
FA12518	0.250	2 Pin	12kV	-	Copper Tube	CF2.75	$160

Tel: (518) 266-6017 / Fax: (518) 266-6013 / info@solidsealing.com
All dimensions are in inches [mm]. Leak rate <1 x 10^{-10} atm-cc/sec (He)

.250 Conductor Diameter Feedthroughs - continued

SST Part #	CONDUCTOR DIA.	NO. OF CONDUCTORS	VOLTAGE	CURRENT	CONDUCTOR MATERIAL	INSTALLATION	LIST PRICE
FA13986	0.250	2 Pin	12kV	-	Copper Tube	KF40	$160
FA13230-02	0.250	2 Pin	12kV	93 Amp	Molybdenum	CF2.75	Contact SST
FA13128-02	0.250	2 Pin	12kV	93 Amp	Molybdenum	KF40	Contact SST
FA13230-03	0.250	2 Pin	12kV	56 Amp	Nickel	CF2.75	Contact SST
FA13128-03	0.250	2 Pin	12kV	56 Amp	Nickel	KF40	Contact SST
FA13230-04	0.250	2 Pin	12kV	12 Amp	304 Stn. Stl.	CF2.75	$145
FA13128-04	0.250	2 Pin	12kV	12 Amp	304 Stn. Stl.	KF40	$145
FA12518-03	0.250	2 Pin	12kV	-	304 Stn. Stl. Tube	CF2.75	$160
FA13986-03	0.250	2 Pin	12kV	-	304 Stn. Stl. Tube	KF40	$160
		4 PIN					
FA13156	0.250	4 Pin	12kV	185 Amp	Copper	CF2.75	$235
FA14294	0.250	4 Pin	12kV	185 Amp	Copper	KF50	$260
FA14463	0.250	4 Pin	12kV	-	Copper Tube	CF2.75	$275
FA14395	0.250	4 Pin	12kV	-	Copper Tube	KF50	$320
FA13156-02	0.250	4 Pin	12kV	93 Amp	Molybdenum	CF2.75	Contact SST
FA14294-02	0.250	4 Pin	12kV	93 Amp	Molybdenum	KF50	Contact SST
FA13156-03	0.250	4 Pin	12kV	56 Amp	Nickel	CF2.75	$235
FA14294-03	0.250	4 Pin	12kV	56 Amp	Nickel	KF50	$260
FA13156-04	0.250	4 Pin	12kV	12 Amp	304 Stn. Stl.	CF2.75	$235
FA14294-04	0.250	4 Pin	12kV	12 Amp	304 Stn. Stl.	KF50	$260
FA14463-02	0.250	4 Pin	12kV	-	304 Stn. Stl. Tube	CF2.75	$275
FA14395-02	0.250	4 Pin	12kV	-	304 Stn. Stl. Tube	KF50	$320

.250 Conductor Diameter RF Feedthroughs

SST Part #	CONDUCTOR DIA.	NO. OF CONDUCTORS	VOLTAGE	CURRENT*	FREQUENCY*	CONDUCTOR MATERIAL	INSTALLATION	LIST PRICE
FA11559	RF Power 0.250	1 Pin	14kV	100 Amp	13.56 MHz	Copper Tube	Weld	$400
FA11563	RF Power 0.250	2 Pin	8kV	100 Amp	13.56 MHz	Copper Tube	Weld	$475
FA14465	RF Power 0.250	2 Pin	8kV	100 Amp	13.56 MHz	Copper Tube	CF2.75	$520
FA14862	RF Power 0.250	2 Pin	8kV	100 Amp	13.56 MHz	Copper Tube	KF40	$520

All of the above RF Feedthroughs are also rated for the following:

Frequency	Current (Amp)
100 KHz	300
300 KHz	250
450 KHz	200

Feedthrough

.375 Conductor Diameter Feedthroughs

SST Part #	CONDUCTOR DIA.	NO. OF CONDUCTORS	VOLTAGE	CURRENT	CONDUCTOR MATERIAL	INSTALLATION	LIST PRICE
FA10917	0.375	1 Pin	8kV	330 Amp	Copper	Weld	$60
FA12591	0.375	1 Pin	8kV	330 Amp	Copper	CF1.33	$100
FA14941	0.375	1 Pin	8kV	330 Amp	Copper	KF16	$100
FA13176	0.375	1 Pin	8kV	-	Copper Tube	Weld	$70
FA14946	0.375	1 Pin	8kV	-	Copper Tube	CF1.33	$110
FA14940	0.375	1 Pin	8kV	-	Copper Tube	KF16	$110
FA10917-03	0.375	1 Pin	8kV	98 Amp	Nickel	Weld	Contact SST
FA12591-03	0.375	1 Pin	8kV	98 Amp	Nickel	CF1.33	Contact SST
FA14941-03	0.375	1 Pin	8kV	98 Amp	Nickel	KF16	Contact SST
FA10917-04	0.375	1 Pin	8kV	21 Amp	304 Stn. Stl.	Weld	$60
FA12591-04	0.375	1 Pin	8kV	21 Amp	304 Stn. Stl.	CF1.33	$100
FA14941-04	0.375	1 Pin	8kV	21 Amp	304 Stn. Stl.	KF16	$100
FA13176-02	0.375	1 Pin	8kV	-	304 Stn. Stl. Tube	Weld	$70
FA14946-02	0.375	1 Pin	8kV	-	304 Stn. Stl. Tube	CF1.33	$110
FA14940-02	0.375	1 Pin	8kV	-	304 Stn. Stl. Tube	KF16	$110
		2 PIN					
FA13205	0.375	2 Pin	8kV	330 Amp	Copper	CF2.75	$175
FA14944	0.375	2 Pin	8kV	330 Amp	Copper	KF50	$200
FA14942	0.375	2 Pin	8kV	-	Copper Tube	CF2.75	$195
FA14943	0.375	2 Pin	8kV	-	Copper Tube	KF50	$220
FA13205-03	0.375	2 Pin	8kV	98 Amp	Nickel	CF2.75	Contact SST
FA14944-03	0.375	2 Pin	8kV	98 Amp	Nickel	KF50	Contact SST
FA13205-04	0.375	2 Pin	8kV	21 Amp	304 Stn. Stl.	CF2.75	$175
FA14944-04	0.375	2 Pin	8kV	21 Amp	304 Stn. Stl.	KF50	$200
FA14942-02	0.375	2 Pin	8kV	-	304 Stn. Stl. Tube	CF2.75	$195
FA14943-02	0.375	2 Pin	8kV	-	304 Stn. Stl. Tube	KF50	$220

.750 Conductor Diameter Feedthroughs

FA10775	0.750	1 Pin	8kV	800 Amp	Copper	Weld	$140
FA12036	0.750	1 Pin	8kV	800 Amp	Copper	CF2.75	$185
FA12851	0.750	1 Pin	8kV	800 Amp	Copper	KF40	$185
FA13695	0.750	1 Pin	8kV	-	Copper Tube	Weld	$150
FA14222	0.750	1 Pin	8kV	-	Copper Tube	CF2.75	$195
FA14945	0.750	1 Pin	8kV	-	Copper Tube	KF40	$195
FA10775-03	0.750	1 Pin	8kV	240 Amp	Nickel	Weld	Contact SST
FA12036-03	0.750	1 Pin	8kV	240 Amp	Nickel	CF2.75	Contact SST
FA12851-03	0.750	1 Pin	8kV	240 Amp	Nickel	KF40	Contact SST
FA10775-04	0.750	1 Pin	8kV	52 Amp	304 Stn. Stl.	Weld	$140
FA12036-04	0.750	1 Pin	8kV	52 Amp	304 Stn. Stl.	CF2.75	$185

Tel: (518) 266-6017 / Fax: (518) 266-6013 / info@solidsealing.com
All dimensions are in inches [mm]. Leak rate <1 x 10^{-10} atm-cc/sec (He)

.750 Conductor Diameter Feedthroughs - continued

SST Part #	CONDUCTOR DIA.	NO. OF CONDUCTORS	VOLTAGE	CURRENT	CONDUCTOR MATERIAL	INSTALLATION	LIST PRICE
FA12851-04	0.750	1 Pin	8kV	52 Amp	304 Stn. Stl.	KF40	$185
FA13695-02	0.750	1 Pin	8kV	-	304 Stn. Stl. Tube	Weld	$150
FA14222-02	0.750	1 Pin	8kV	-	304 Stn. Stl. Tube	CF2.75	$195
FA14945-02	0.750	1 Pin	8kV	-	304 Stn. Stl. Tube	KF40	$195

.750 Conductor Diameter Water Cooled Feedthroughs

FA14050	0.750	1 Pin	8kV	1000 Amp	Tellurium Copper	Weld	$710
FA13510	0.750	1 Pin	8kV	1000 Amp	Tellurium Copper	CF2.75	$755

HV Plug Accessory

FP10883-02	Fits 0.094	20kV	26 Amp	$45
FP10884-02	Fits 0.094	10kV	26 Amp	$45

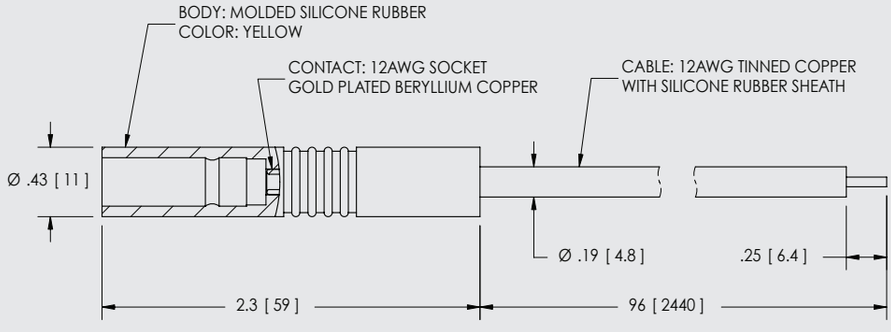

SST Part #	CONDUCTOR DIA.	VOLTAGE	CURRENT	LIST PRICE
FP10883-02	Fits 0.094	20kV	26 Amp	$45

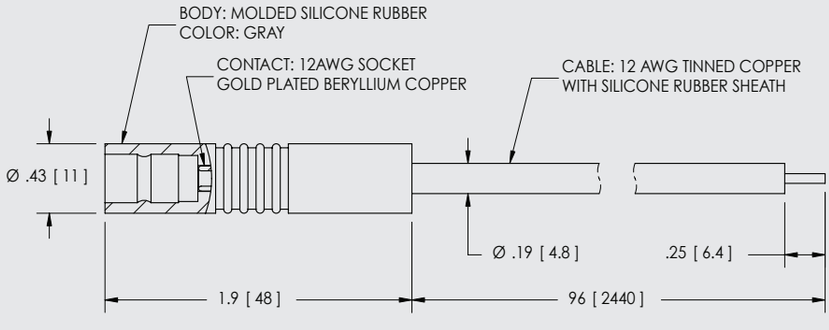

SST Part #	CONDUCTOR DIA.	VOLTAGE	CURRENT	LIST PRICE
FP10884-02	Fits 0.094	10kV	26 Amp	$45

Connectors

SST Standard Multipin Connector Specifications

Voltage: to 12 kV DC

Current: to 40 Amp

Temperature: -269˚C to 450˚C
(Extreme ratings are with plug disconnected and vary depending on the part number.)

Internal Pressure: 1 x 10^{-10} Torr up to 3500 PSIG

These are just a few examples of SST standard connectors. Contact SST for your modified or custom connector requirements. For a complete library of connector drawings and specifications as well as other SST parts, visit **www.solidsealing/parts**

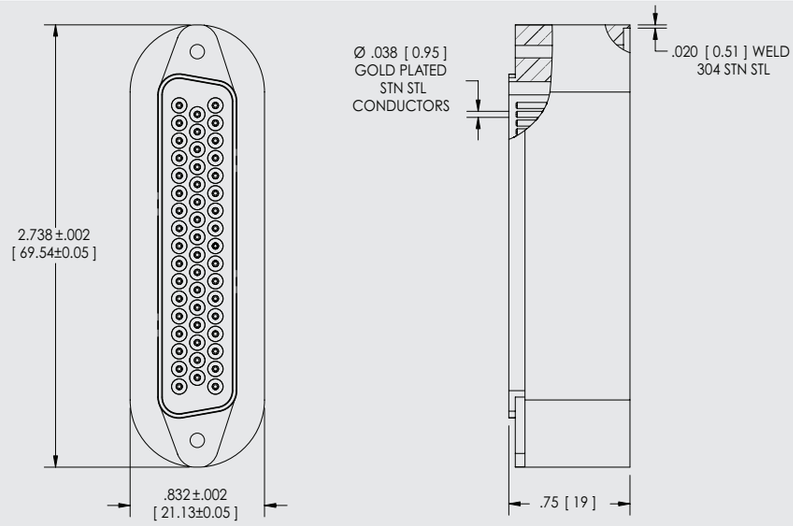

SST Part #	NO. OF PINS	VOLTAGE	CONDUCTOR	INSTALLATION	PLUG INCLUDED	LIST PRICE
FA13122	50 Pin	500V	0.040 Stn. Stl. Gold Plated	Weld	Without Plug	$350

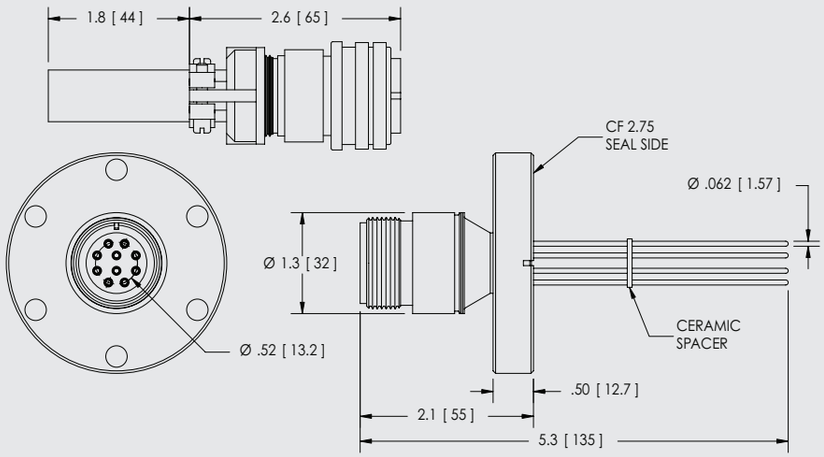

SST Part #	NO. OF PINS	VOLTAGE	CONDUCTOR	INSTALLATION	PLUG INCLUDED	LIST PRICE
KT13053	10 Pin	700V	0.062 Alumel®	CF2.75	Yes	$348

Tel: (518) 266-6017 / Fax: (518) 266-6013 / info@solidsealing.com
All dimensions are in inches [mm]. Leak rate <1 x 10^{-10} atm-cc/sec (He)

Sub D – Double Ended Receptacle

SST Part #	NO. OF PINS	VOLTAGE	CONDUCTOR	CURRENT	INSTALLATION	PLUG INCLUDED	LIST PRICE
FA13118	9 Pin	500V	0.040 Stn. Stl. Gold Plated	5 Amp	Weld	Sold separately-see table below	$220
FA13288	9 Pin	500V	0.040 Stn. Stl. Gold Plated	5 Amp	CF2.75	Sold separately-see table below	$280
FA13951	9 Pin	500V	0.040 Stn. Stl. Gold Plated	5 Amp	KF40	Sold separately-see table below	$270
FA13119	15 Pin	500V	0.040 Stn. Stl. Gold Plated	5 Amp	Weld	Sold separately-see table below	$235
FA13121	25 Pin	500V	0.040 Stn. Stl. Gold Plated	5 Amp	Weld	Sold separately-see table below	$260
FA13287	25 Pin	500V	0.040 Stn. Stl. Gold Plated	5 Amp	CF4.50	Sold separately-see table below	$375
FA13122	50 Pin	500V	0.040 Stn. Stl. Gold Plated	5 Amp	Weld	Sold separately-see table below	$350
FA13952	50 Pin	500V	0.040 Stn. Stl. Gold Plated	5 Amp	CF6.00	Sold separately-see table below	$560

Sub D Plugs

SST Part #	NO. OF PINS	VOLTAGE	PLUG/CONTACTS	CURRENT	LIST PRICE
KT14879	9 Pin	500V	Airside Plug Copper Alloy Contacts	5 Amp	$8
FA13606	9 Pin	500V	PEEK™/ Vacuum Plug Copper Alloy Contacts	15 Amp	$145
KT14877	15 Pin	500V	Airside Plug Copper Alloy Contacts	5 Amp	$10
FA13604	15 Pin	500V	PEEK™/Vacuum Plug Copper Alloy Contacts	15 Amp	$180
KT14878	25 Pin	500V	Airside Plug Copper Alloy Contacts	5 Amp	$12
FA13605	25 Pin	500V	PEEK™/Vacuum Plug Copper Alloy Contacts	15 Amp	$215
KT14879	50 Pin	500V	Airside Plug Copper Alloy Contacts	5 Amp	$18
FA13606	50 Pin	500V	PEEK™/Vacuum Plug Copper Alloy Contacts	15 Amp	$350

MIL-C-26482 Type Single Ended Circular 10, 19, 32, 41 Receptacle

SST Part #	NO. OF PINS	VOLTAGE	CURRENT	CONDUCTOR	INSTALLATION	PLUG INCLUDED	LIST PRICE
FA13003	10 Pin	1kV	5 Amp	0.040 Stn. Stl. Gold Plated	Weld	Sold separately-see table below	$179
FA13807	10 Pin	1kV	5 Amp	0.040 Stn. Stl. Gold Plated	CF2.75	Sold separately-see table below	$224
FA13002	19 Pin	1kV	5 Amp	0.040 Stn. Stl. Gold Plated	Weld	Sold separately-see table below	$200
FA13808	19 Pin	1kV	5 Amp	0.040 Stn. Stl. Gold Plated	CF2.75	Sold separately-see table below	$245
FA14813	19 Pin	1kV	5 Amp	0.040 Stn. Stl. Gold Plated	KF40	Sold separately-see table below	$245
FA13001	32 Pin	1kV	5 Amp	0.040 Stn. Stl. Gold Plated	Weld	Sold separately-see table below	$238
FA13809	32 Pin	1kV	5 Amp	0.040 Stn. Stl. Gold Plated	CF2.75	Sold separately-see table below	$283
FA12998	41 Pin	1kV	5 Amp	0.040 Stn. Stl. Gold Plated	Weld	Sold separately-see table below	$260
FA13810	41 Pin	1kV	5 Amp	0.040 Stn. Stl. Gold Plated	CF3.375	Sold separately-see table below	$330
FA14947	41 Pin	1kV	5 Amp	0.040 Stn. Stl. Gold Plated	KF50	Sold separately-see table below	$330

SST Part #	NO. OF PINS	VOLTAGE	PLUG/CONTACTS	CURRENT	LIST PRICE
KT14378	10 Pin	1 kV	Airside Plug Copper Alloy Contacts	5 Amp	$55
KT14379	19 Pin	1 kV	Airside Plug Copper Alloy Contacts	5 Amp	$60
KT14380	32 Pin	1 kV	Airside Plug Copper Alloy Contacts	5 Amp	$65
KT14381	41 Pin	1 kV	Airside Plug Copper Alloy Contacts	5 Amp	$80

Connectors

MIL-C-26482 Double Ended Type Circular 10, 19, 32, 41 Receptacle

SST Part #	NO. OF PINS	VOLTAGE	CURRENT	CONDUCTOR	INSTALLATION	PLUG INCLUDED	LIST PRICE
FA12933	10 Pin	1kV	5 Amp	0.040 Stn. Stl. Gold Plated	Weld	Sold separately-see table below	$222
FA12932	19 Pin	1kV	5 Amp	0.040 Stn. Stl. Gold Plated	Weld	Sold separately-see table below	$246
FA14922	19 Pin	1kV	5 Amp	0.040 Stn. Stl. Gold Plated	CF2.75	Sold separately-see table below	$291
FA12931	32 Pin	1kV	5 Amp	0.040 Stn. Stl. Gold Plated	Weld	Sold separately-see table below	$285
FA12930	41 Pin	1kV	5 Amp	0.040 Stn. Stl. Gold Plated	Weld	Sold separately-see table below	$310
FA14473	41 Pin	1kV	5 Amp	0.040 Stn. Stl. Gold Plated	KF50	Sold separately-see table below	$380

SST Part #	NO. OF PINS	VOLTAGE	PLUG/CONTACTS	CURRENT	LIST PRICE
KT14378	10 Pin	1kV	Airside Plug Copper Alloy Contacts	5 Amp	$55
FA13461	10 Pin	1kV	PEEK™/ Vacuum Plug Copper Alloy Contacts	15 Amp	$102
KT14379	19 Pin	1kV	Airside Plug Copper Alloy Contacts	5 Amp	$60
FA13462	19 Pin	1kV	PEEK™/ Vacuum Plug Copper Alloy Contacts	15 Amp	$136
KT14380	32 Pin	1kV	Airside Plug Copper Alloy Contacts	5 Amp	$65
FA13463	32 Pin	1kV	PEEK™/ Vacuum Plug Copper Alloy Contacts	15 Amp	$153
KT14381	41 Pin	1kV	Airside Plug Copper Alloy Contacts	5 Amp	$80
FA13464	41 Pin	1kV	PEEK™/ Vacuum Plug Copper Alloy Contacts	15 Amp	$174

MIL-C-5015 Type 2, 4, 6, 10 Connectors & Plugs

SST Part #	NO. OF PINS	VOLTAGE	CURRENT	CONDUCTOR	INSTALLATION	PLUG INCLUDED	LIST PRICE
FA12654	2 Pin	700V	16 Amp	0.094 Nickel	Weld	No	$179
KT12654	2 Pin	700V	16 Amp	0.094 Nickel	Weld	Yes	$205
FA12654-02	2 Pin	700V	23 Amp	0.094 Molybdenum	Weld	No	$189
KT12654-02	2 Pin	700V	23 Amp	0.094 Molybdenum	Weld	Yes	$215
FA13302-02	2 Pin	700V	23 Amp	0.094 Molybdenum	KF16	No	$240
KT13302-02	2 Pin	700V	23 Amp	0.094 Molybdenum	KF16	Yes	$214
FA13302	2 Pin	700V	16 Amp	0.094 Nickel	KF16	No	$204
KT13302	2 Pin	700V	16 Amp	0.094 Nickel	KF16	Yes	$230
FA10658	4 Pin	700V	4.8 Amp	0.062 Alumel®	Weld	No	$142
KT10658	4 Pin	700V	4.8 Amp	0.062 Alumel®	Weld	Yes	$170
FA12655	4 Pin	700V	16 Amp	0.094 Nickel	Weld	No	$222
KT12655	4 Pin	700V	16 Amp	0.094 Nickel	Weld	Yes	$260
FA12655-02	4 Pin	700V	23 Amp	0.094 Molybdenum	Weld	No	$242
KT12655-02	4 Pin	700V	23 Amp	0.094 Molybdenum	Weld	Yes	$280
FA11355	4 Pin	700V	4.8 Amp	0.062 Alumel®	CF1.33	No	$167
KT11355	4 Pin	700V	4.8 Amp	0.062 Alumel®	CF1.33	Yes	$195
FA13258	4 Pin	700V	16 Amp	0.094 Nickel	CF1.33	No	$247
KT13258	4 Pin	700V	16 Amp	0.094 Nickel	CF1.33	Yes	$285
FA13258-02	4 Pin	700V	23 Amp	0.094 Molybdenum	CF1.33	No	$267
KT13258-02	4 Pin	700V	23 Amp	0.094 Molybdenum	CF1.33	Yes	$305
FA13129	4 Pin	700V	4.8 Amp	0.062 Alumel®	CF2.75	No	$182
KT13129	4 Pin	700V	4.8 Amp	0.062 Alumel®	CF2.75	Yes	$210

Tel: (518) 266-6017 / Fax: (518) 266-6013 / info@solidsealing.com
All dimensions are in inches [mm]. Leak rate <1 x 10^{-10} atm-cc/sec (He)

MIL-C-5015 - continued

SST Part #	NO. OF PINS	VOLTAGE	CURRENT	CONDUCTOR	INSTALLATION	PLUG INCLUDED	LIST PRICE
FA13010	4 Pin	700V	4.8 Amp	0.062 Alumel®	KF16	No	$167
KT13010	4 Pin	700V	4.8 Amp	0.062 Alumel®	KF16	Yes	$195
FA10657	6 Pin	700V	4.8 Amp	0.062 Alumel®	Weld	No	$158
KT10657	6 Pin	700V	4.8 Amp	0.062 Alumel®	Weld	Yes	$186
FA12534	6 Pin	700V	4.8 Amp	0.062 Alumel®	CF1.33	No	$183
KT12534	6 Pin	700V	4.8 Amp	0.062 Alumel®	CF1.33	Yes	$211
FA11683	6 Pin	700V	4.8 Amp	0.062 Alumel®	CF2.75	No	$198
KT11683	6 Pin	700V	4.8 Amp	0.062 Alumel®	CF2.75	Yes	$226
FA13220	6 Pin	700V	4.8 Amp	0.062 Alumel®	KF16	No	$183
KT13220	6 Pin	700V	4.8 Amp	0.062 Alumel®	KF16	Yes	$211
FA14489	6 Pin	700V	4.8 Amp	0.062 Alumel®	NPT 1/2	No	$217
KT14489	6 Pin	700V	4.8 Amp	0.062 Alumel®	NPT 1/2	Yes	$245
FA10656	10 Pin	700V	4.8 Amp	0.062 Alumel®	Weld	No	$280
KT10656	10 Pin	700V	4.8 Amp	0.062 Alumel®	Weld	Yes	$308
FA12661	10 Pin	700V	4.8 Amp	0.062 Alumel®	CF1.33	No	$305
KT12661	10 Pin	700V	4.8 Amp	0.062 Alumel®	CF1.33	Yes	$33
FA13053	10 Pin	700V	4.8 Amp	0.062 Alumel®	CF2.75	No	$320
KT13053	10 Pin	700V	4.8 Amp	0.062 Alumel®	CF2.75	Yes	$348
FA12239	10 Pin	700V	4.8 Amp	0.062 Alumel®	KF16	No	$305
KT12239	10 Pin	700V	4.8 Amp	0.062 Alumel®	KF16	Yes	$333
FA12239-02	10 Pin	700V	4.8 Amp	0.062 Alumel®	KF16	No	$270
KT12239-02	10 Pin	700V	4.8 Amp	0.062 Alumel®	KF16	Yes	$390
FA14251	10 Pin	700V	4.8 Amp	0.062 Alumel®	NPT 1/2	No	$347
KT14251	10 Pin	700V	4.8 Amp	0.062 Alumel®	NPT 1/2	Yes	$375
FA13080	10 Pin	700V	4.8 Amp	0.062 Alumel®	1 inch Bolt	No	$327
KT13080	10 Pin	700V	4.8 Amp	0.062 Alumel®	1 inch Bolt	Yes	$355

SST Part #	NO. OF PINS	VOLTAGE	PLUG/CONTACTS	CURRENT	LIST PRICE
KT14249	2 Pin	700V	Airside Plug Copper Alloy Contacts	23 Amp	$26
KT11600	4 Pin	700V	Airside Plug Copper Alloy Contacts	13 Amp	$28
KT14145	4 Pin	700V	Airside Plug Copper Alloy Contacts	23 Amp	$38
KT13803	6 Pin	700V	Airside Plug Copper Alloy Contacts	13 Amp	$28
KT13108	10 Pin	700V	Airside Plug Copper Alloy Contacts	13 Amp	$28

High Voltage Connectors

SST Part #	NO. OF PINS	VOLTAGE	CURRENT	CONDUCTOR	INSTALLATION	PLUG INCLUDED	LIST PRICE
FA15686	2 Pin	12 kV	13 Amp	0.062 Molybdenum	Weld	No	$353
KT15686	2 Pin	12 kV	13 Amp	0.062 Molybdenum	Weld	Yes	$423
FA15787	4 Pin	12 kV	13 Amp	0.062 Molybdenum	Weld	No	$464
KT15787	4 Pin	12 kV	13 Amp	0.062 Molybdenum	Weld	Yes	$389
FA13340	7 Pin	12 kV	13 Amp	0.062 Molybdenum	Weld	No	$425
KT13340	7 Pin	12 kV	13 Amp	0.062 Molybdenum	Weld	Yes	$505

Coaxial

SST Standard Coaxial Specifications

Voltage: to 20 kV DC

Current: to 16.5 Amp

Temperature: -269˚C to 450˚C
(Extreme ratings are with plug disconnected and vary depending on the part number.)

Internal Pressure: 1 x 10^{-10} Torr up to 4000 PSIG

Classifications: Microdot, SMB, SMA, BNC, MHV, SHV 5, 10, 20 kV, N, HN

These are just a few examples of SST standard coaxial parts. Contact SST for your modified or custom coaxial requirements. For a complete library of coaxial drawings and specifications as well as other SST parts visit **www.solidsealing/parts**

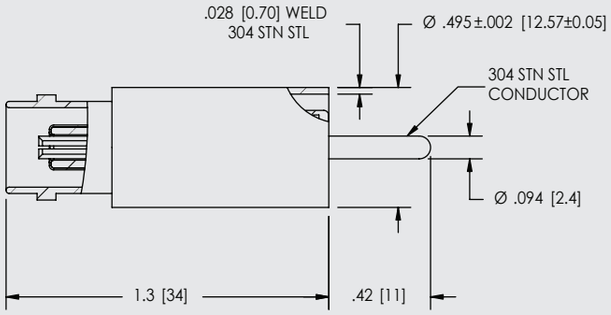

SST Part #	DETAIL	VOLTAGE	CURRENT	CONDUCTOR	NO. OF CONNECTORS	INSTALLATION	PLUG INCLUDED	LIST PRICE
FA10326	Grounded Shield Recessed	500V	3.6 Amp	0.094 304 Stn. Stl.	1	Weld	No	$25
KT10326	Grounded Shield Recessed	500V	3.6 Amp	0.094 304 Stn. Stl.	1	Weld	Yes	$31

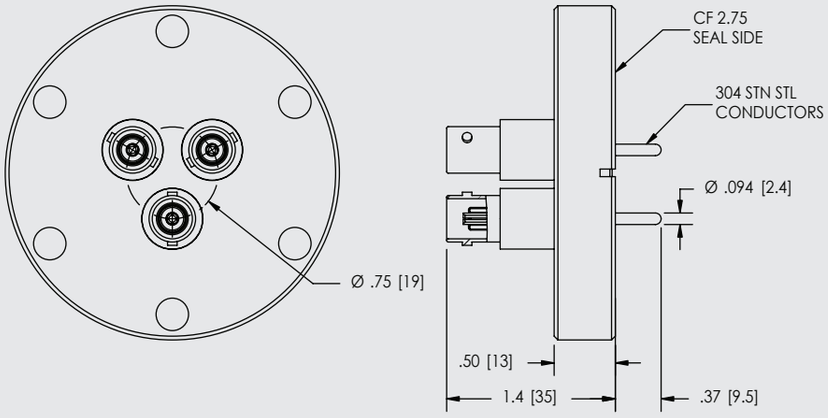

SST Part #	DETAIL	VOLTAGE	CURRENT	CONDUCTOR	NO. OF CONNECTORS	INSTALLATION	PLUG INCLUDED	LIST PRICE
FA11170	Grounded Shield Recessed	500V	3.6 Amp	0.094 304 Stn. Stl.	3	CF2.75 Flange	No	$165
KT11170	Grounded Shield Recessed	500V	3.6 Amp	0.094 304 Stn. Stl.	3	CF2.75 Flange	Yes	$183

Tel: (518) 266-6017 / Fax: (518) 266-6013 / info@solidsealing.com
All dimensions are in inches [mm]. Leak rate <1 x 10^{-10} atm-cc/sec (He)

Microdot

SST Part #	DETAIL	VOLTAGE	CURRENT	CONDUCTOR	INSTALLATION	PLUG INCLUDED	LIST PRICE
FA11502	Grounded Shield Recessed	1kV	2 Amp	0.042 Molybdenum	Weld	No	$35
KT11502	Grounded Shield Recessed	1kV	2 Amp	0.042 Molybdenum	Weld	Yes	$75

SMB

FA10477	Grounded Shield Recessed	375V	1.4 Amp	0.032 416 Stn. Stl.	Weld	No	$75
KT10477	Grounded Shield Recessed	375V	1.4 Amp	0.032 416 Stn. Stl.	Weld	Yes	$110

SMA

FA10638	Grounded Shield Recessed	500V	1.8 Amp	0.050 304 Stn. Stl.	Weld	No	$40
KT10638	Grounded Shield Recessed	500V	1.8 Amp	0.050 304 Stn. Stl.	Weld	Yes	$80
FA14319	Grounded Shield Recessed	500V	1.8 Amp	0.050 304 Stn. Stl.	CF1.33	No	$100
KT14319	Grounded Shield Recessed	500V	1.8 Amp	0.050 304 Stn. Stl.	CF1.33	Yes	$140

SMA 50 Ohm

FA10824	Grounded Shield Recessed	500V	0.8 Amp	0.040 300 Series SS	Weld	No	$255
KT10824	Grounded Shield Recessed	500V	0.8 Amp	0.040 300 Series SS	Weld	Yes	$295
FA13157	Grounded Shield Recessed	500V	0.8 Amp	0.040 300 Series SS	CF1.33	No	$295
KT13157	Grounded Shield Recessed	500V	0.8 Amp	0.040 300 Series SS	CF1.33	Yes	$335

SMA 50 Ohm Double Ended

FA10823	Grounded Shield	500V	0.8 Amp	-	Weld	No	$235
KT10823	Grounded Shield	500V	0.8 Amp	-	Weld	Yes	$275
FA12779	Grounded Shield	500V	0.8 Amp	-	CF1.33	No	$275
KT12779	Grounded Shield	500V	0.8 Amp	-	CF1.33	Yes	$315
FA13851	Grounded Shield	500V	0.8 Amp	-	KF25	No	$275
KT13851	Grounded Shield	500V	0.8 Amp	-	KF25	Yes	$315

BNC

SST Part #	DETAIL	VOLTAGE	CURRENT	CONDUCTOR	NO. OF CONNECTORS	INSTALLATION	PLUG INCLUDED	LIST PRICE
FA10326	Grounded Shield Recessed	500V	3.6 Amp	0.094 304 Stn. Stl.	1	Weld	No	$25
KT10326	Grounded Shield Recessed	500V	3.6 Amp	0.094 304 Stn. Stl.	1	Weld	Yes	$31
FA11164	Grounded Shield Recessed	500V	3.6 Amp	0.094 304 Stn. Stl.	1	CF1.33	No	$65
KT11164	Grounded Shield Recessed	500V	3.6 Amp	0.094 304 Stn. Stl.	1	CF1.33	Yes	$71
FA11166	Grounded Shield Recessed	500V	3.6 Amp	0.094 304 Stn. Stl.	1	CF2.75	No	$85
KT11166	Grounded Shield Recessed	500V	3.6 Amp	0.094 304 Stn. Stl.	1	CF2.75	Yes	$91
FA11174	Grounded Shield Recessed	500V	3.6 Amp	0.094 304 Stn. Stl.	1	KF16	No	$65
KT11174	Grounded Shield Recessed	500V	3.6 Amp	0.094 304 Stn. Stl.	1	KF16	Yes	$71
FA14576	Grounded Shield Recessed	500V	3.6 Amp	0.094 304 Stn. Stl.	1	KF40	No	$85
KT14576	Grounded Shield Recessed	500V	3.6 Amp	0.094 304 Stn. Stl.	1	KF40	Yes	$91
FA12982	Grounded Shield Recessed	500V	3.6 Amp	0.094 304 Stn. Stl.	1	NPT 3/8"	No	$69
KT12982	Grounded Shield Recessed	500V	3.6 Amp	0.094 304 Stn. Stl.	1	NPT 3/8"	Yes	$75

Coaxial

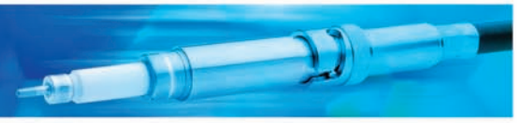

BNC - continued

SST Part #	DETAIL	VOLTAGE	CURRENT	CONDUCTOR	NO. OF CONNECTORS	INSTALLATION	PLUG INCLUDED	LIST PRICE
FA11334	Floating Shield Recessed	500V	3.6 Amp	0.094 304 Stn. Stl.	1	Weld	No	$244
KT11334	Floating Shield Recessed	500V	3.6 Amp	0.094 304 Stn. Stl.	1	Weld	Yes	$250
FA11333	Floating Shield Recessed	500V	3.6 Amp	0.094 304 Stn. Stl.	1	CF1.33	No	$284
KT11333	Floating Shield Recessed	500V	3.6 Amp	0.094 304 Stn. Stl.	1	CF1.33	Yes	$290
FA14760	Floating Shield Recessed	500V	3.6 Amp	0.094 304 Stn. Stl.	1	CF2.75	No	$157
KT14760	Floating Shield Recessed	500V	3.6 Amp	0.094 304 Stn. Stl.	1	CF2.75	Yes	$163
FA12900	Floating Shield Recessed	500V	3.6 Amp	0.094 304 Stn. Stl.	1	KF16	No	$284
KT12900	Floating Shield Recessed	500V	3.6 Amp	0.094 304 Stn. Stl.	1	KF16	Yes	$290
FA14755	Floating Shield Recessed	500V	3.6 Amp	0.094 304 Stn. Stl.	1	KF40	No	$157
KT14755	Floating Shield Recessed	500V	3.6 Amp	0.094 304 Stn. Stl.	1	KF40	Yes	$157
FA12628	Floating Shield Recessed	500V	3.6 Amp	0.094 304 Stn. Stl.	1	Weld	No	$112
KT12628	Floating Shield Recessed	500V	3.6 Amp	0.094 304 Stn. Stl.	1	Weld	Yes	$118
					2 CONNECTOR			
FA11168	Grounded Shield Recessed	500V	3.6 Amp	0.094 304 Stn. Stl.	2	CF2.75	No	$125
KT11168	Grounded Shield Recessed	500V	3.6 Amp	0.094 304 Stn. Stl.	2	CF2.75	Yes	$137
FA14580	Grounded Shield Recessed	500V	3.6 Amp	0.094 304 Stn. Stl.	2	KF40	No	$125
KT14580	Grounded Shield Recessed	500V	3.6 Amp	0.094 304 Stn. Stl.	2	KF40	Yes	$137
					3 CONNECTOR			
FA11170	Grounded Shield Recessed	500V	3.6 Amp	0.094 304 Stn. Stl.	3	CF2.75	No	$165
KT11170	Grounded Shield Recessed	500V	3.6 Amp	0.094 304 Stn. Stl.	3	CF2.75	Yes	$183
FA14581	Grounded Shield Recessed	500V	3.6 Amp	0.094 304 Stn. Stl.	3	KF40	No	$165
KT14581	Grounded Shield Recessed	500V	3.6 Amp	0.094 304 Stn. Stl.	3	KF40	Yes	$183
					4 CONNECTOR			
FA11172	Grounded Shield Recessed	500V	3.6 Amp	0.094 304 Stn. Stl.	4	CF2.75	No	$205
KT11172	Grounded Shield Recessed	500V	3.6 Amp	0.094 304 Stn. Stl.	4	CF2.75	Yes	$229
FA12452	Grounded Shield Recessed	500V	3.6 Amp	0.094 304 Stn. Stl.	4	KF40	No	$205
KT12452	Grounded Shield Recessed	500V	3.6 Amp	0.094 304 Stn. Stl.	4	KF40	Yes	$229

BNC Double Ended

FA11084	Floating Shield	500V	3.6 Amp		1	Weld	No	$264
KT11084	Floating Shield	500V	3.6 Amp		1	Weld	Yes	$270
FA14771	Floating Shield	500V	3.6 Amp		1	CF1.33	No	$304
KT14771	Floating Shield	500V	3.6 Amp		1	CF1.33	Yes	$310
FA12914	Floating Shield	500V	3.6 Amp		1	CF2.75	No	$309
KT12914	Floating Shield	500V	3.6 Amp		1	CF2.75	Yes	$315
FA14761	Floating Shield	500V	3.6 Amp		1	KF16	No	$304
KT14761	Floating Shield	500V	3.6 Amp		1	KF16	Yes	$310
FA14543	Floating Shield	500V	3.6 Amp		1	KF40	No	$309
KT14543	Floating Shield	500V	3.6 Amp		1	KF40	Yes	$315
FA13608	Grounded Shield	500V	3.6 Amp		1	Weld	No	$160
KT13608	Grounded Shield	500V	3.6 Amp		1	Weld	Yes	$166

Tel: (518) 266-6017 / Fax: (518) 266-6013 / info@solidsealing.com
All dimensions are in inches [mm]. Leak rate <1 x 10^{-10} atm-cc/sec (He)

BNC Double Ended - continued

SST Part #	DETAIL	VOLTAGE	CURRENT	CONDUCTOR	NO. OF CONNECTORS	INSTALLATION	PLUG INCLUDED	LIST PRICE
FA11312	Grounded Shield	500V	3.6 Amp		1	CF1.33	No	$200
KT11312	Grounded Shield	500V	3.6 Amp		1	CF1.33	Yes	$206
FA13332	Grounded Shield	500V	3.6 Amp		1	CF2.75	No	$215
KT13332	Grounded Shield	500V	3.6 Amp		1	CF2.75	Yes	$221
FA14574	Grounded Shield	500V	3.6 Amp		1	KF16	No	$200
KT14574	Grounded Shield	500V	3.6 Amp		1	KF16	Yes	$206
FA14155	Grounded Shield	500V	3.6 Amp		1	KF40	No	$215
KT14155	Grounded Shield	500V	3.6 Amp		1	KF40	Yes	$221
					2 CONNECTOR			
FA11318	Grounded Shield	500V	3.6 Amp		2	CF2.75	No	$395
KT11318	Grounded Shield	500V	3.6 Amp		2	CF2.75	Yes	$407
FA14218	Grounded Shield	500V	3.6 Amp		2	KF40	No	$395
KT14218	Grounded Shield	500V	3.6 Amp		2	KF40	Yes	$407
					3 CONNECTOR			
FA14949	Grounded Shield	500V	3.6 Amp		3	CF2.75	No	$570
KT14949	Grounded Shield	500V	3.6 Amp		3	CF2.75	Yes	$588
FA14578	Grounded Shield	500V	3.6 Amp		3	KF50	No	$570
KT14578	Grounded Shield	500V	3.6 Amp		3	KF50	Yes	$588
					4 CONNECTOR			
FA13025	Grounded Shield	500V	3.6 Amp		4	CF3.375	No	$741
KT13025	Grounded Shield	500V	3.6 Amp		4	CF3.375	Yes	$765
FA13787	Grounded Shield	500V	3.6 Amp		4	KF50	No	$741
KT13787	Grounded Shield	500V	3.6 Amp		4	KF50	Yes	$765

Type N

FA11152	Grounded Shield	1.5kV	3.6 Amp	0.094 304 Stn. Stl.		Weld	No	$109
KT11152	Grounded Shield	1.5kV	3.6 Amp	0.094 304 Stn. Stl.		Weld	Yes	$120
FA13692	Grounded Shield	1.5kV	3.6 Amp	0.094 304 Stn. Stl.		CF1.33	No	$169
KT13692	Grounded Shield	1.5kV	3.6 Amp	0.094 304 Stn. Stl.		CF1.33	Yes	$180
FA14247	Grounded Shield	1.5kV	3.6 Amp	0.094 304 Stn. Stl.		CF2.75	No	$174
KT14247	Grounded Shield	1.5kV	3.6 Amp	0.094 304 Stn. Stl.		CF2.75	Yes	$185
FA13247	Grounded Shield	1.5kV	3.6 Amp	0.094 304 Stn. Stl.		KF25	No	$169
KT13247	Grounded Shield	1.5kV	3.6 Amp	0.094 304 Stn. Stl.		KF25	Yes	$180

Type N 50 Ohm

FA13296	Grounded Shield	1.5kV	5 Amp	0.121 416 Stn. Stl.		Weld	No	$354
KT13296	Grounded Shield	1.5kV	5 Amp	0.121 416 Stn. Stl.		Weld	Yes	$365
FA14091	Grounded Shield	1.5kV	5 Amp	0.121 416 Stn. Stl.		KF16	No	$414
KT14091	Grounded Shield	1.5kV	5 Amp	0.121 416 Stn. Stl.		KF16	Yes	$425

Coaxial

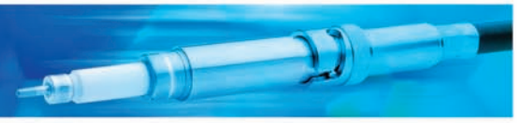

HN 50 Ohm

SST Part #	DETAIL	VOLTAGE	CURRENT	CONDUCTOR	NO. OF CONNECTORS	INSTALLATION	PLUG INCLUDED	LIST PRICE
FA14539	Grounded Shield	7kV	7 Amp	0.191 Copper Nickel 70/30	1	Weld	No	$383
KT14539	Grounded Shield	7kV	7 Amp	0.191 Copper Nickel 70/30	1	Weld	Yes	$477

MHV

FA10337	Grounded Shield	5kV	3.6 Amp	0.094 304 Stn. Stl.	1	Weld	No	$25
KT10337	Grounded Shield	5kV	3.6 Amp	0.094 304 Stn. Stl.	1	Weld	Yes	$36
FA11176	Grounded Shield	5kV	3.6 Amp	0.094 304 Stn. Stl.	1	CF1.33	No	$74
KT11176	Grounded Shield	5kV	3.6 Amp	0.094 304 Stn. Stl.	1	CF1.33	Yes	$85
FA11178	Grounded Shield	5kV	3.6 Amp	0.094 304 Stn. Stl.	1	CF2.75	No	$85
KT11178	Grounded Shield	5kV	3.6 Amp	0.094 304 Stn. Stl.	1	CF2.75	Yes	$96
FA11269	Grounded Shield	5kV	3.6 Amp	0.094 304 Stn. Stl.	1	KF16	No	$74
KT11269	Grounded Shield	5kV	3.6 Amp	0.094 304 Stn. Stl.	1	KF16	Yes	$85
FA11270	Grounded Shield	5kV	3.6 Amp	0.094 304 Stn. Stl.	1	KF40	No	$85
KT11270	Grounded Shield	5kV	3.6 Amp	0.094 304 Stn. Stl.	1	KF40	Yes	$96
FA11653	Floating Shield	5kV	3.6 Amp	0.094 304 Stn. Stl.	1	Weld	No	$249
KT11653	Floating Shield	5kV	3.6 Amp	0.094 304 Stn. Stl.	1	Weld	Yes	$260
FA14758	Floating Shield	5kV	3.6 Amp	0.094 304 Stn. Stl.	1	CF2.75	No	$169
KT14758	Floating Shield	5kV	3.6 Amp	0.094 304 Stn. Stl.	1	CF2.75	Yes	$180
FA14757	Floating Shield	5kV	3.6 Amp	0.094 304 Stn. Stl.	1	KF40	No	$169
KT14757	Floating Shield	5kV	3.6 Amp	0.094 304 Stn. Stl.	1	KF40	Yes	$180
FA14756	Floating Shield	5kV	3.6 Amp	0.094 304 Stn. Stl.	1	Weld	No	$104
KT14756	Floating Shield	5kV	3.6 Amp	0.094 304 Stn. Stl.	1	Weld	Yes	$115
					2 CONNECTOR			
FA11179	Grounded Shield	5kV	3.6 Amp	0.094 304 Stn. Stl.	2	CF2.75	No	$125
KT11179	Grounded Shield	5kV	3.6 Amp	0.094 304 Stn. Stl.	2	CF2.75	Yes	$147
FA11271	Grounded Shield	5kV	3.6 Amp	0.094 304 Stn. Stl.	2	KF40	No	$125
KT11271	Grounded Shield	5kV	3.6 Amp	0.094 304 Stn. Stl.	2	KF40	Yes	$147
					3 CONNECTOR			
FA11180	Grounded Shield	5kV	3.6 Amp	0.094 304 Stn. Stl.	3	CF2.75	No	$165
KT11180	Grounded Shield	5kV	3.6 Amp	0.094 304 Stn. Stl.	3	CF2.75	Yes	$198
FA11272	Grounded Shield	5kV	3.6 Amp	0.094 304 Stn. Stl.	3	KF40	No	$165
KT11272	Grounded Shield	5kV	3.6 Amp	0.094 304 Stn. Stl.	3	KF40	Yes	$198
					4 CONNECTOR			
FA11268	Grounded Shield	5kV	3.6 Amp	0.094 304 Stn. Stl.	4	CF2.75	No	$205
KT11268	Grounded Shield	5kV	3.6 Amp	0.094 304 Stn. Stl.	4	CF2.75	Yes	$249
FA11273	Grounded Shield	5kV	3.6 Amp	0.094 304 Stn. Stl.	4	KF40	No	$205
KT11273	Grounded Shield	5kV	3.6 Amp	0.094 304 Stn. Stl.	4	KF40	Yes	$249

Tel: (518) 266-6017 / Fax: (518) 266-6013 / info@solidsealing.com
All dimensions are in inches [mm]. Leak rate <1 x 10^{-10} atm-cc/sec (He)

MHV Double Ended

SST Part #	DETAIL	VOLTAGE	CURRENT	NO. OF CONNECTORS	INSTALLATION	PLUG INCLUDED	LIST PRICE
FA13687	Grounded Shield	5kV	3.6 Amp	1	Weld	No	$165
KT13687	Grounded Shield	5kV	3.6 Amp	1	Weld	Yes	$176
FA11314	Grounded Shield	5kV	3.6 Amp	1	CF1.33	No	$225
KT11314	Grounded Shield	5kV	3.6 Amp	1	CF1.33	Yes	$236
FA14575	Grounded Shield	5kV	3.6 Amp	1	KF16	No	$225
KT14575	Grounded Shield	5kV	3.6 Amp	1	KF16	Yes	$236
FA14571	Grounded Shield	5kV	3.6 Amp	1	KF40	No	$225
KT14571	Grounded Shield	5kV	3.6 Amp	1	KF40	Yes	$236
FA11652	Floating Shield	5kV	3.6 Amp	1	Weld	No	$269
KT11652	Floating Shield	5kV	3.6 Amp	1	Weld	Yes	$280
FA14764	Floating Shield	5kV	3.6 Amp	1	CF1.33	No	$309
KT14764	Floating Shield	5kV	3.6 Amp	1	CF1.33	Yes	$320
FA14772	Floating Shield	5kV	3.6 Amp	1	CF2.75	No	$334
KT14772	Floating Shield	5kV	3.6 Amp	1	CF2.75	Yes	$345
FA14762	Floating Shield	5kV	3.6 Amp	1	KF16	No	$309
KT14762	Floating Shield	5kV	3.6 Amp	1	KF16	Yes	$320
FA14763	Floating Shield	5kV	3.6 Amp	1	KF40	No	$334
KT14763	Floating Shield	5kV	3.6 Amp	1	KF40	Yes	$345
				2 CONNECTOR			
FA14572	Grounded Shield	5kV	3.6 Amp	2	KF40	No	$405
KT14572	Grounded Shield	5kV	3.6 Amp	2	KF40	Yes	$427
				3 CONNECTOR			
FA14201	Grounded Shield	5kV	3.6 Amp	3	CF2.75	No	$585
KT14201	Grounded Shield	5kV	3.6 Amp	3	CF2.75	Yes	$618
FA14579	Grounded Shield	5kV	3.6 Amp	3	KF50	No	$585
KT14579	Grounded Shield	5kV	3.6 Amp	3	KF50	Yes	$618
				4 CONNECTOR			
FA12440	Grounded Shield	5kV	3.6 Amp	4	CF3.375	No	$765
KT12440	Grounded Shield	5kV	3.6 Amp	4	CF3.375	Yes	$809
FA14230	Grounded Shield	5kV	3.6 Amp	4	KF50	No	$765
KT14230	Grounded Shield	5kV	3.6 Amp	4	KF50	Yes	$809

Coaxial

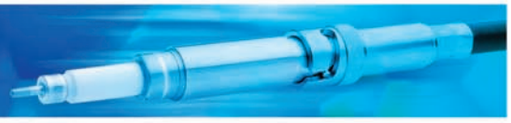

SHV 5kV

SST Part #	DETAIL	VOLTAGE	CURRENT	CONDUCTOR	NO. OF CONNECTORS	INSTALLATION	PLUG INCLUDED	LIST PRICE
FA10333	Grounded Shield Recessed	5kV	10 Amp	0.094 Nickel	1	Weld	No	$41
KT10333	Grounded Shield Recessed	5kV	10 Amp	0.094 Nickel	1	Weld	Yes	$60
FA13401	Grounded Shield Recessed	5kV	10 Amp	0.094 Nickel	1	CF1.33	No	$96
KT13401	Grounded Shield Recessed	5kV	10 Amp	0.094 Nickel	1	CF1.33	Yes	$115
FA13650	Grounded Shield Recessed	5kV	10 Amp	0.094 Nickel	1	CF2.75	No	$111
KT13650	Grounded Shield Recessed	5kV	10 Amp	0.094 Nickel	1	CF2.75	Yes	$130
FA14782	Floating Shield Recessed	5kV	10 Amp	0.094 Nickel	1	KF16	No	$255
KT14782	Floating Shield Recessed	5kV	10 Amp	0.094 Nickel	1	KF16	Yes	$274
FA14776	Grounded Shield Recessed	5kV	10 Amp	0.094 Nickel	1	KF40	No	$111
KT14776	Grounded Shield Recessed	5kV	10 Amp	0.094 Nickel	1	KF40	Yes	$130
FA12842	Grounded Shield Exposed	5kV	10 Amp	0.094 Nickel	1	Weld	No	$60
KT12842	Grounded Shield Exposed	5kV	10 Amp	0.094 Nickel	1	Weld	Yes	$79
FA13276	Grounded Shield Exposed	5kV	10 Amp	0.094 Nickel	1	CF1.33	No	$100
KT13276	Grounded Shield Exposed	5kV	10 Amp	0.094 Nickel	1	CF1.33	Yes	$119
FA13953	Grounded Shield Exposed	5kV	10 Amp	0.094 Nickel	1	CF2.75	No	$146
KT13953	Grounded Shield Exposed	5kV	10 Amp	0.094 Nickel	1	CF2.75	Yes	$165
FA14773	Grounded Shield Exposed	5kV	10 Amp	0.094 Nickel	1	KF16	No	$100
KT14773	Grounded Shield Exposed	5kV	10 Amp	0.094 Nickel	1	KF16	Yes	$119
FA14777	Grounded Shield Exposed	5kV	10 Amp	0.094 Nickel	1	KF40	No	$146
KT14777	Grounded Shield Exposed	5kV	10 Amp	0.094 Nickel	1	KF40	Yes	$165
FA11654	Floating Shield Recessed	5kV	10 Amp	0.094 Nickel	1	Weld	Yes	$215
KT11654	Floating Shield Recessed	5kV	10 Amp	0.094 Nickel	1	Weld	Yes	$234
FA14783	Floating Shield Recessed	5kV	10 Amp	0.094 Nickel	1	CF1.33	No	$255
KT14783	Floating Shield Recessed	5kV	10 Amp	0.094 Nickel	1	CF1.33	Yes	$274
					2 CONNECTOR			
FA14241	Grounded Shield Recessed	5kV	10 Amp	0.094 Nickel	2	CF2.75	No	$177
KT14241	Grounded Shield Recessed	5kV	10 Amp	0.094 Nickel	2	CF2.75	Yes	$215
FA14774	Grounded Shield Recessed	5kV	10 Amp	0.094 Nickel	2	KF40	No	$177
KT14774	Grounded Shield Recessed	5kV	10 Amp	0.094 Nickel	2	KF40	Yes	$215
FA14292	Grounded Shield Exposed	5kV	10 Amp	0.094 Nickel	2	CF2.75	No	$215
KT14292	Grounded Shield Exposed	5kV	10 Amp	0.094 Nickel	2	CF2.75	Yes	$253
FA13092	Grounded Shield Exposed	5kV	10 Amp	0.094 Nickel	2	KF40	No	$215
KT13092	Grounded Shield Exposed	5kV	10 Amp	0.094 Nickel	2	KF40	Yes	$253
					3 CONNECTOR			
FA14920	Grounded Shield Recessed	5kV	10 Amp	0.094 Nickel	3	CF2.75	No	$233
KT14920	Grounded Shield Recessed	5kV	10 Amp	0.094 Nickel	3	CF2.75	Yes	$290
FA14775	Grounded Shield Recessed	5kV	10 Amp	0.094 Nickel	3	KF40	No	$233
KT14775	Grounded Shield Recessed	5kV	10 Amp	0.094 Nickel	3	KF40	Yes	$290
FA14293	Grounded Shield Exposed	5kV	10 Amp	0.094 Nickel	3	CF2.75	No	$290
KT14293	Grounded Shield Exposed	5kV	10 Amp	0.094 Nickel	3	CF2.75	Yes	$247

Tel: (518) 266-6017 / Fax: (518) 266-6013 / info@solidsealing.com
All dimensions are in inches [mm]. Leak rate <1 x 10^{-10} atm-cc/sec (He)

SHV - continued

SST Part #	DETAIL	VOLTAGE	CURRENT	CONDUCTOR	NO. OF CONNECTORS	INSTALLATION	PLUG INCLUDED	LIST PRICE
FA14779	Grounded Shield Exposed	5kV	10 Amp	0.094 Nickel	3	KF40	No	$290
KT14779	Grounded Shield Exposed	5kV	10 Amp	0.094 Nickel	3	KF40	Yes	$347
					4 CONNECTOR			
FA13392	Grounded Shield Recessed	5kV	10 Amp	0.094 Nickel	4	CF2.75	No	$289
KT13392	Grounded Shield Recessed	5kV	10 Amp	0.094 Nickel	4	CF2.75	Yes	$365
FA14008	Grounded Shield Recessed	5kV	10 Amp	0.094 Nickel	4	KF40	No	$289
KT14008	Grounded Shield Recessed	5kV	10 Amp	0.094 Nickel	4	KF40	Yes	$365
FA13393	Grounded Shield Exposed	5kV	10 Amp	0.094 Nickel	4	CF2.75	No	$365
KT13393	Grounded Shield Exposed	5kV	10 Amp	0.094 Nickel	4	CF2.75	Yes	$441
FA14780	Grounded Shield Exposed	5kV	10 Amp	0.094 Nickel	4	KF40	No	$365
KT14780	Grounded Shield Exposed	5kV	10 Amp	0.094 Nickel	4	KF40	Yes	$441

SHV 10kV

FA12968	Grounded Shield Recessed	10kV	10 Amp	0.051 Nickel	1	Weld	No	$90
KT12968	Grounded Shield Recessed	10kV	10 Amp	0.051 Nickel	1	Weld	Yes	$150
FA12969	Grounded Shield Recessed	10kV	10 Amp	0.051 Nickel	1	CF1.33	No	$130
KT12969	Grounded Shield Recessed	10kV	10 Amp	0.051 Nickel	1	CF1.33	Yes	$190
FA10606	Grounded Shield Exposed	10kV	2.2 Amp	304 Stn. Stl. 4-40 thread	1	Weld	No	$95
KT10606	Grounded Shield Exposed	10kV	2.2 Amp	304 Stn. Stl. 4-40 thread	1	Weld	Yes	$155
FA12967	Grounded Shield Exposed	10kV	10 Amp	0.051 Nickel	1	Weld	No	$75
KT12967	Grounded Shield Exposed	10kV	10 Amp	0.051 Nickel	1	Weld	Yes	$135
FA14786	Grounded Shield Exposed	10kV	10 Amp	0.051 Nickel	1	CF1.33	No	$120
KT14786	Grounded Shield Exposed	10kV	10 Amp	0.051 Nickel	1	CF1.33	Yes	$180
FA14787	Grounded Shield Exposed	10kV	10 Amp	0.051 Nickel	1	KF16	No	$120
KT14787	Grounded Shield Exposed	10kV	10 Amp	0.051 Nickel	1	KF16	Yes	$180

SHV 20kV

FA10313	Grounded Shield Recessed	20kV	16.5 Amp	0.094 Nickel	1	Weld	No	$125
KT10313	Grounded Shield Recessed	20kV	16.5 Amp	0.094 Nickel	1	Weld	Yes	$250
FA12970	Grounded Shield Recessed	20kV	16.5 Amp	0.094 Nickel	1	CF1.33	No	$185
KT12970	Grounded Shield Recessed	20kV	16.5 Amp	0.094 Nickel	1	CF1.33	Yes	$310
FA10321	Grounded Shield Exposed	20kV	16.5 Amp	0.094 Nickel	1	Weld	No	$125
KT10321	Grounded Shield Exposed	20kV	16.5 Amp	0.094 Nickel	1	Weld	Yes	$250
FA13101	Grounded Shield Exposed	20kV	16.5 Amp	0.094 Nickel	1	CF1.33	No	$185
KT13101	Grounded Shield Exposed	20kV	16.5 Amp	0.094 Nickel	1	CF1.33	Yes	$310

Thermocouple

SST Standard Thermocouple Specifications

Temperature: -269˚C to 450˚C
(Extreme ratings are with plug disconnected and vary depending on the part number.)

Internal Pressure: 1 x 10^{-10} Torr up to 3500 PSIG

Types: T, K, J, R/S, C, E

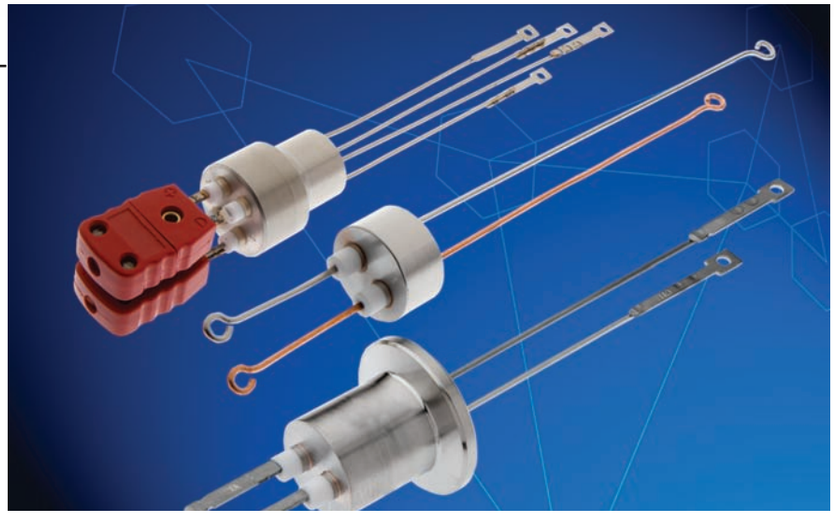

These are just a few examples of SST standard thermocouple parts. Contact SST for your modified or custom thermocouple requirements. For a complete library of thermocouple drawings and specifications as well as other SST parts visit **www.solidsealing/parts**

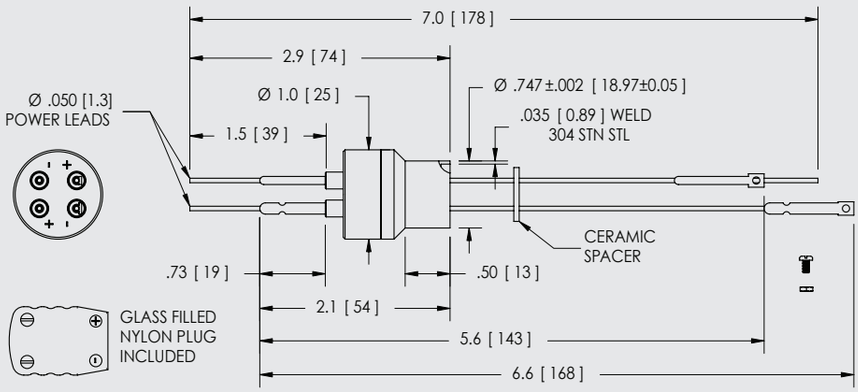

SST Part #	THERMOCOUPLE TYPE	NO. OF PAIRS	INSTALLATION	PLUG INCLUDED	PRICE
FA11472	Type K	2	Weld	Yes	$138
FA11472-02	Type J	2	Weld	Yes	$138
FA11472-03	Type C	2	Weld	Yes	$138
FA11472-04	Type E	2	Weld	Yes	$138

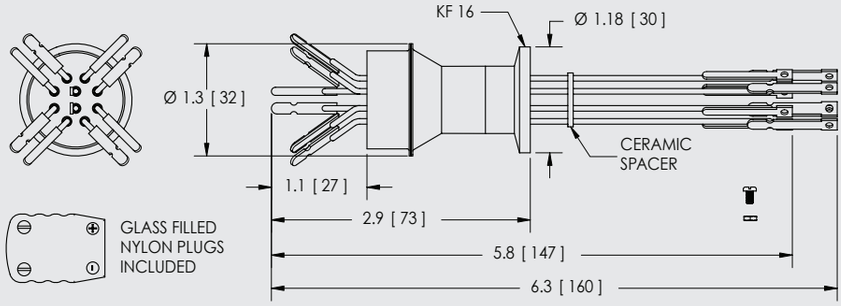

SST Part #	THERMOCOUPLE TYPE	NO. OF PAIRS	INSTALLATION	PLUG INCLUDED	PRICE
FA12115	Type K	5	KF16	Yes	$423
FA12115-02	Type J	5	KF16	Yes	$423
FA12115-03	Type C	5	KF16	Yes	$423
FA12115-04	Type E	5	KF16	Yes	$423

Tel: (518) 266-6017 / Fax: (518) 266-6013 / info@solidsealing.com
All dimensions are in inches [mm]. Leak rate <1 x 10^{-10} atm-cc/sec (He)

LOOP TYPE

SST Part #	THERMOCOUPLE TYPE	NO. OF PAIRS	INSTALLATION	PLUG INCLUDED	LIST PRICE
FA12133	Alloy 11	Single	Weld	-	$26
FA12133-02	Constantan	Single	Weld	-	$26
FA15369	Copper	Single	Weld	-	$26
FA11738-02	Type T	1	Weld	-	$90
FA11738	Type R/S	1	Weld	-	$90
FA11693-02	Type T	1	CF1.33	No	$115
FA14918	Type T	1	CF2.75	No	$135
FA14152-02	Type T	1	KF16	No	$115
FA11693	Type R/S	1	CF1.33	No	$115
FA14918-02	Type R/S	1	CF2.75	No	$135
		2 PAIR			
FA11685-02	Type T	2	Weld	No	$150
FA11685	Type R/S	2	Weld	No	$150
FA11684-02	Type T	2	CF1.33	No	$175
FA11684	Type R/S	2	CF1.33	No	$175
FA13959-02	Type T	2	CF2.75	No	$195
FA13959	Type R/S	2	CF2.75	No	$195
FA11697-02	Type T	2	KF16	No	$175
FA11697	Type R/S	2	KF16	No	$175

SPADE TYPE

FA11631	Chromel® Spade Type Connection	Single	Weld	Pan Head Screw	$38
FA11632	Alumel® Spade Type Connection	Single	Weld	Pan Head Screw	$38
FA11631-02	Iron Spade Type Connection	Single	Weld	Pan Head Screw	$38
FA11632-02	Constantan® Spade Type Connection	Single	Weld	Pan Head Screw	$38
FA11631-03	Alloy 405* Spade Type Connection	Single	Weld	Pan Head Screw	$38
FA11632-03	Alloy 426* Spade Type Connection	Single	Weld	Pan Head Screw	$38
FA13192	Chromel® Screw Type Connection	Single	Weld	Pan Head Screw	$38
FA13178	Alumel® Screw Type Connection	Single	Weld	Pan Head Screw	$38
FA13192-02	Iron Screw Type Connection	Single	Weld	Pan Head Screw	$38
FA13178-02	Constantan® Screw Type Connection	Single	Weld	Pan Head Screw	$38
FA13192-03	Alloy 405* Screw Type Connection	Single	Weld	Pan Head Screw	$38
FA13178-03	Alloy 426* Screw Type Connection	Single	Weld	Pan Head Screw	$38
FA11208	Type K	1	Weld	Yes	$73
FA11689	Type K	1	CF1.33	Yes	$98
FA14266	Type K	1	CF2.75	Yes	$118
FA11694	Type K	1	KF16	Yes	$98
FA11208-02	Type J	1	Weld	Yes	$73
FA11689-02	Type J	1	CF1.33	Yes	$98
FA14266-02	Type J	1	CF2.75	Yes	$118
FA11694-02	Type J	1	KF16	Yes	$98

*or equivalent

Thermocouple

SPADE TYPE - continued

SST Part #	THERMOCOUPLE TYPE	NO. OF PAIRS	INSTALLATION	PLUG INCLUDED	LIST PRICE
FA11208-03	Type C	1	Weld	Yes	$73
FA11689-03	Type C	1	CF1.33	Yes	$98
FA14266-03	Type C	1	CF2.75	Yes	$118
FA11694-03	Type C	1	KF16	Yes	$98
FA11208-04	Type E	1	Weld	Yes	$73
FA11689-04	Type E	1	CF1.33	Yes	$98
FA14266-04	Type E	1	CF2.75	Yes	$118
FA11694-04	Type E	1	KF16	Yes	$98
		2 PAIR			
FA11472	Type K	2	Weld	Yes	$138
FA11690	Type K	2	CF1.33	Yes	$163
FA13091	Type K	2	CF2.75	Yes	$183
FA13246	Type K	2	KF16	Yes	$163
FA12329	Type K	2	NPT 1/2	Yes	$188
FA11472-02	Type J	2	Weld	Yes	$138
FA11690-02	Type J	2	CF1.33	Yes	$163
FA13091-02	Type J	2	CF2.75	Yes	$183
FA13246-02	Type J	2	KF 16	Yes	$163
FA12329-02	Type J	2	NPT 1/2	Yes	$188
FA11472-03	Type C	2	Weld	Yes	$138
FA11690-03	Type C	2	CF1.33	Yes	$163
FA13091-03	Type C	2	CF2.75	Yes	$183
FA13246-03	Type C	2	KF 16	Yes	$163
FA12329-03	Type C	2	NPT 1/2	Yes	$188
FA11472-04	Type E	2	Weld	Yes	$138
FA11690-04	Type E	2	CF1.33	Yes	$163
FA13091-04	Type E	2	CF2.75	Yes	$183
FA13246-04	Type E	2	KF 16	Yes	$163
FA12329-04	Type E	2	NPT 1/2	Yes	$188
		3 PAIR			
FA13193	Type K	3	Weld	Yes	$219
FA13539	Type K	3	CF1.33	Yes	$244
FA12328	Type K	3	CF2.75	Yes	$264
FA14198	Type K	3	KF16	Yes	$244
FA13193-02	Type J	3	Weld	Yes	$219
FA13539-02	Type J	3	CF1.33	Yes	$244
FA12328-02	Type J	3	CF2.75	Yes	$264
FA14198-02	Type J	3	KF16	Yes	$244
FA13193-03	Type C	3	Weld	Yes	$219
FA13539-03	Type C	3	CF1.33	Yes	$244

Tel: (518) 266-6017 / Fax: (518) 266-6013 / info@solidsealing.com
All dimensions are in inches [mm]. Leak rate <1 x 10^{-10} atm-cc/sec (He)

SPADE TYPE - continued

SST Part #	THERMOCOUPLE TYPE	NO. OF PAIRS	INSTALLATION	PLUG INCLUDED	LIST PRICE
FA12328-03	Type C	3	CF2.75	Yes	$264
FA14198-03	Type C	3	KF16	Yes	$244
FA13193-04	Type E	3	Weld	Yes	$219
FA13539-04	Type E	3	CF1.33	Yes	$244
FA12328-04	Type E	3	CF2.75	Yes	$264
FA14198-04	Type E	3	KF16	Yes	$244
		5 PAIR			
FA11719	Type K	5	Weld	Yes	$398
FA13794	Type K	5	CF1.33	Yes	$423
FA13184	Type K	5	CF2.75	Yes	$443
FA12115	Type K	5	KF16	Yes	$423
FA11719-02	Type J	5	Weld	Yes	$398
FA13794-02	Type J	5	CF1.33	Yes	$423
FA13184-02	Type J	5	CF2.75	Yes	$443
FA12115-02	Type J	5	KF16	Yes	$423
FA11719-03	Type C	5	Weld	Yes	$398
FA13794-03	Type C	5	CF1.33	Yes	$423
FA13184-03	Type C	5	CF2.75	Yes	$443
FA12115-03	Type C	5	KF16	Yes	$423
FA11719-04	Type E	5	Weld	Yes	$398
FA13794-04	Type E	5	CF1.33	Yes	$423
FA13184-04	Type E	5	CF2.75	Yes	$443
FA12115-04	Type E	5	KF16	Yes	$423

THERMOCOUPLE / POWER

SST Part #	THERMOCOUPLE TYPE	NO. OF PAIRS	VOLTAGE	CURRENT	CONDUCTOR	INSTALLATION	PLUG INCLUDED	LIST PRICE
FA11651	Type K	1 Pair	3kV	27 Amp	0.050 Copper	Weld	Yes	$168
FA12424	Type K	1 Pair	3kV	27 Amp	0.050 Copper	CF1.33	Yes	$193
FA13019	Type K	1 Pair	3kV	27 Amp	0.050 Copper	CF2.75	Yes	$213
FA11651-05	Type K	1 Pair	3kV	8.2 Amp	0.050 Nickel	Weld	Yes	$168
FA12424-05	Type K	1 Pair	3kV	8.2 Amp	0.050 Nickel	CF1.33	Yes	$193
FA13019-05	Type K	1 Pair	3kV	8.2 Amp	0.050 Nickel	CF2.75	Yes	$213
FA11651-02	Type J	1 Pair	3kV	27 Amp	0.050 Copper	Weld	Yes	$168
FA12424-02	Type J	1 Pair	3kV	27 Amp	0.050 Copper	CF1.33	Yes	$193
FA13019-02	Type J	1 Pair	3kV	27 Amp	0.050 Copper	CF2.75	Yes	$213
FA11651-06	Type J	1 Pair	3kV	8.2 Amp	0.050 Nickel	Weld	Yes	$168
FA12424-06	Type J	1 Pair	3kV	8.2 Amp	0.050 Nickel	CF1.33	Yes	$193
FA13019-06	Type J	1 Pair	3kV	8.2 Amp	0.050 Nickel	CF2.75	Yes	$213
FA11651-03	Type C	1 Pair	3kV	27 Amp	0.050 Copper	Weld	Yes	$168
FA12424-03	Type C	1 Pair	3kV	27 Amp	0.050 Copper	CF1.33	Yes	$193
FA13019-03	Type C	1 Pair	3kV	27 Amp	0.050 Copper	CF2.75	Yes	$213
FA11651-07	Type C	1 Pair	3kV	8.2 Amp	0.050 Nickel	Weld	Yes	$168

Thermocouple

POWER - continued

SST Part #	THERMOCOUPLE TYPE	NO. OF PAIRS	VOLTAGE	CURRENT	CONDUCTOR	INSTALLATION	PLUG INCLUDED	LIST PRICE
FA12424-07	Type C	1 Pair	3kV	8.2 Amp	0.050 Nickel	CF1.33	Yes	$193
FA13019-07	Type C	1 Pair	3kV	8.2 Amp	0.050 Nickel	CF2.75	Yes	$213
FA11651-04	Type E	1 Pair	3kV	27 Amp	0.050 Copper	Weld	Yes	$168
FA12424-04	Type E	1 Pair	3kV	8.2 Amp	0.050 Copper	CF1.33	Yes	$193
FA13019-04	Type E	1 Pair	3kV	27 Amp	0.050 Copper	CF2.75	Yes	$213
FA11651-08	Type E	1 Pair	3kV	8.2 Amp	0.050 Nickel	Weld	Yes	$168
FA12424-08	Type E	1 Pair	3kV	8.2 Amp	0.050 Nickel	CF1.33	Yes	$193
FA13019-08	Type E	1 Pair	3kV	8.2 Amp	0.050 Nickel	CF2.75	Yes	$213
			5kV					
FA11473	Type K	1 Pair	5kV	55 Amp	0.094 Copper	Weld	Yes	$194
FA12134	Type K	1 Pair	5kV	55 Amp	0.094 Copper	CF1.33	Yes	$219
FA13496	Type K	1 Pair	5kV	55 Amp	0.094 Copper	CF2.75	Yes	$265
FA12520	Type K	1 Pair	5kV	55 Amp	0.094 Copper	KF16	Yes	$219
FA12489	Type K	1 Pair	5kV	55 Amp	0.094 Copper	1 inch Bolt	Yes	$325
FA11473-05	Type K	1 Pair	5kV	16.5 Amp	0.094 Nickel	Weld	Yes	$194
FA12134-05	Type K	1 Pair	5kV	16.5 Amp	0.094 Nickel	CF1.33	Yes	$219
FA13496-05	Type K	1 Pair	5kV	16.5 Amp	0.094 Nickel	CF2.75	Yes	$265
FA12520-05	Type K	1 Pair	5kV	16.5 Amp	0.094 Nickel	KF16	Yes	$219
FA11473-02	Type J	1 Pair	5kV	55 Amp	0.094 Copper	Weld	Yes	$194
FA12134-02	Type J	1 Pair	5kV	55 Amp	0.094 Copper	CF1.33	Yes	$219
FA13496-02	Type J	1 Pair	5kV	55 Amp	0.094 Copper	CF2.75	Yes	$265
FA12520-02	Type J	1 Pair	5kV	55 Amp	0.094 Copper	KF16	Yes	$219
FA11473-06	Type J	1 Pair	5kV	16.5 Amp	0.094 Nickel	Weld	Yes	$194
FA12134-06	Type J	1 Pair	5kV	16.5 Amp	0.094 Nickel	CF1.33	Yes	$219
FA13496-06	Type J	1 Pair	5kV	16.5 Amp	0.094 Nickel	CF2.75	Yes	$265
FA12520-06	Type J	1 Pair	5kV	16.5 Amp	0.094 Nickel	KF16	Yes	$219
FA11473-03	Type C	1 Pair	5kV	55 Amp	0.094 Copper	Weld	Yes	$194
FA12134-03	Type C	1 Pair	5kV	55 Amp	0.094 Copper	CF1.33	Yes	$219
FA13496-03	Type C	1 Pair	5kV	55 Amp	0.094 Copper	CF2.75	Yes	$265
FA12520-03	Type C	1 Pair	5kV	55 Amp	0.094 Copper	KF16	Yes	$219
FA11473-07	Type C	1 Pair	5kV	16.5 Amp	0.094 Nickel	Weld	Yes	$194
FA12134-07	Type C	1 Pair	5kV	16.5 Amp	0.094 Nickel	CF1.33	Yes	$219
FA13496-07	Type C	1 Pair	5kV	16.5 Amp	0.094 Nickel	CF2.75	Yes	$265
FA12520-07	Type C	1 Pair	5kV	16.5 Amp	0.094 Nickel	KF16	Yes	$219
FA11473-04	Type E	1 Pair	5kV	55 Amp	0.094 Copper	Weld	Yes	$194
FA12134-04	Type E	1 Pair	5kV	55 Amp	0.094 Copper	CF1.33	Yes	$219
FA13496-04	Type E	1 Pair	5kV	55 Amp	0.094 Copper	CF2.75	Yes	$265
FA12520-04	Type E	1 Pair	5kV	55 Amp	0.094 Copper	KF16	Yes	$219
FA11473-08	Type E	1 Pair	5kV	16.5 Amp	0.094 Nickel	Weld	Yes	$194
FA12134-08	Type E	1 Pair	5kV	16.5 Amp	0.094 Nickel	CF1.33	Yes	$219
FA13496-08	Type E	1 Pair	5kV	16.5 Amp	0.094 Nickel	CF2.75	Yes	$265
FA12520-08	Type E	1 Pair	5kV	16.5 Amp	0.094 Nickel	KF16	Yes	$219

Tel: (518) 266-6017 / Fax: (518) 266-6013 / info@solidsealing.com
All dimensions are in inches [mm]. Leak rate <1 x 10^{-10} atm-cc/sec (He)

MIL-C-5015 Connector

SST Part #	THERMOCOUPLE TYPE	NO. OF PAIRS	CONDUCTOR DIAMETER	INSTALLATION	PLUG INCLUDED	LIST PRICE
FA10658-02	Type K	2 Pair	0.062	Weld	No	$170
KT10658-02	Type K	2 Pair	0.062	Weld	Yes	$240
FA11355-02	Type K	2 Pair	0.062	CF1.33	No	$195
KT11355-02	Type K	2 Pair	0.062	CF1.33	Yes	$265
FA13129-02	Type K	2 Pair	0.062	CF2.75	No	$215
KT13129-02	Type K	2 Pair	0.062	CF2.75	Yes	$285
FA13010-02	Type K	2 Pair	0.062	KF16	No	$195
KT13010-02	Type K	2 Pair	0.062	KF16	Yes	$265
KT11355-02	Type K	2 Pair	0.062	CF1.33	Yes	$280
		3 PAIR				
FA10657-02	Type K	3 Pair	0.062	Weld	No	$200
KT10657-02	Type K	3 Pair	0.062	Weld	Yes	$290
FA12534-02	Type K	3 Pair	0.062	CF1.33	No	$225
KT12534-02	Type K	3 Pair	0.062	CF1.33	Yes	$315
FA11683-02	Type K	3 Pair	0.062	CF2.75	No	$245
KT11683-02	Type K	3 Pair	0.062	CF2.75	Yes	$335
FA13220-02	Type K	3 Pair	0.062	KF16	No	$225
KT13220-02	Type K	3 Pair	0.062	KF16	Yes	$315
		5 PAIR				
FA10656-02	Type K	5 Pair	0.062	Weld	No	$245
KT10656-02	Type K	5 Pair	0.062	Weld	Yes	$365
FA12661-02	Type K	5 Pair	0.062	CF1.33	No	$270
KT12661-02	Type K	5 Pair	0.062	CF1.33	Yes	$390
FA13053-02	Type K	5 Pair	0.062	CF2.75	No	$290
KT13053-02	Type K	5 Pair	0.062	CF2.75	Yes	$410
FA12239-02	Type K	5 Pair	0.062	KF16	No	$290
KT12239-02	Type K	5 Pair	0.062	KF16	Yes	$290

Isolator

SST Standard Isolator Specifications

Voltage: to 65 kV

Temperature: -269˚C to 450˚C

Internal Pressure: 1 x 10^{-10} Torr up to 1000 PSIG

ID Dimension: .11″ to 2.5″

SST has designed and manufactured many custom isolators with customer specific dimensions and ratings. Please contact us with your specific requirements. We can check our inventory for components or assemblies that may also be modified to meet your needs.

These are just a few examples of SST standard isolator parts. For a complete library of isolator drawings and specifications as well as other SST parts visit **www.solidsealing/parts**

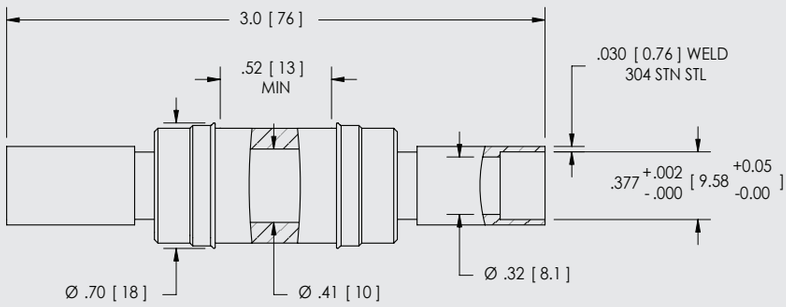

SST Part #	INSULATOR I.D.	VOLTAGE	TEMPERATURE ˚C CAPABILITY	INSTALLATION	LIST PRICE
FA11733	Insulator ID .41	13kV	-269 to 450	Weld	$120.00

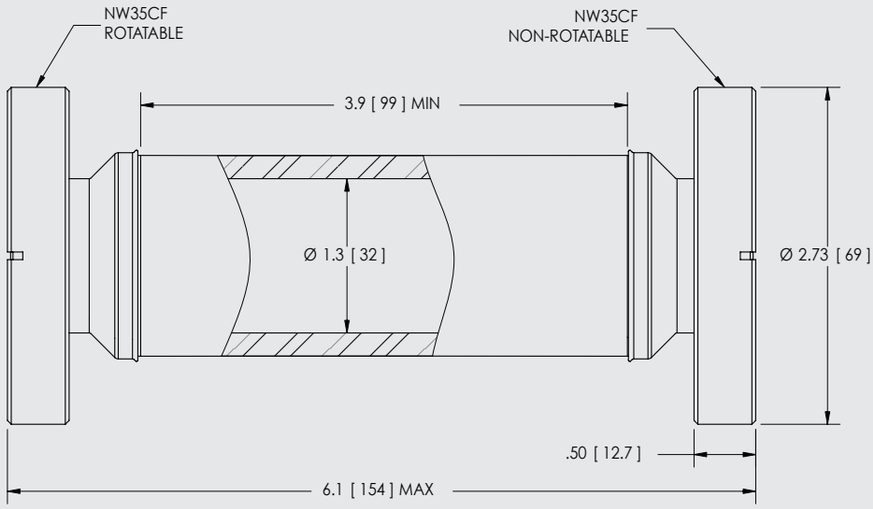

SST Part #	DETAIL	VOLTAGE	INSTALLATION	LIST PRICE
FA13278	Insulator ID 1.3	65kV	CF2.75	Contact SST

Tel: (518) 266-6017 / Fax: (518) 266-6013 / info@solidsealing.com
All dimensions are in inches [mm]. Leak rate <1 x 10^{-10} atm-cc/sec (He)

Insulator ID: .11, .25, .41, 1.3, 2.0, 2.5

SST Part #	INSULATOR I.D.	VOLTAGE	TEMPERATURE CAPABILITY °C	INSTALLATION	LIST PRICE
FA15279	ID 1.3	5kV	-269 to 450	Weld	Contact SST
FA15381	ID 1.3	5kV	-269 to 450	CF2.75	Contact SST
FA15379	ID 1.3	5kV	-55 to 450	Weld	Contact SST
FA13179	ID 1.3	5kV	-55 to 450	CF2.75	Contact SST
		6 kV			
FA12927	ID .11	6kV	-269 to 450	Weld	$45
		13 kV			
FA10617	ID .25	13kV	-269 to 450	Weld .312 OD	$65
FA10622	ID .25	13kV	-269 to 450	Weld .250 OD	$70
FA11733	ID .41	13kV	-269 to 450	Weld	$120
		35 kV			
FA13028	ID 1.3	35kV	-55 to 450	Weld	Contact SST
FA15380	ID 1.3	35kV	-55 to 450	CF2.75	Contact SST
		40 kV			
FA12821	ID 2.0	40kV	-55 to 450	Weld	Contact SST
		60 kV			
FA12614	ID 2.5	60kV	-55 to 450	Weld	$482
		65 kV			
FA15382	ID 1.3	65kV	-269 to 450	Weld	Contact SST
FA13607	ID 1.3	65kV	-269 to 450	CF2.75	Contact SST
FA13029	ID 1.3	65kV	-55 to 450	Weld	$282
FA13278	ID 1.3	65kV	-55 to 450	CF2.75	Contact SST

Baseplate

SST Standard Baseplate Specifications

Temperature: -25˚C to 205˚C

Internal Pressure: 1 x 10^{-10} Torr up to 200 PSIG

1 inch diameter bolt

Many of SST's feedthroughs, connectors, coaxial, and thermocouples can be supplied with a baseplate bolt.

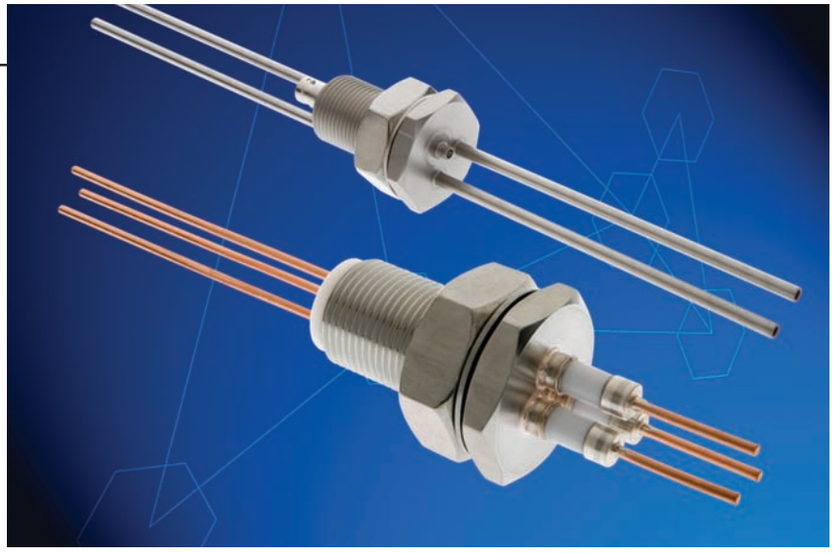

These are just a few examples of SST standard baseplate parts. For a complete library of baseplate drawings and specifications as well as other SST parts visit **www.solidsealing/parts**

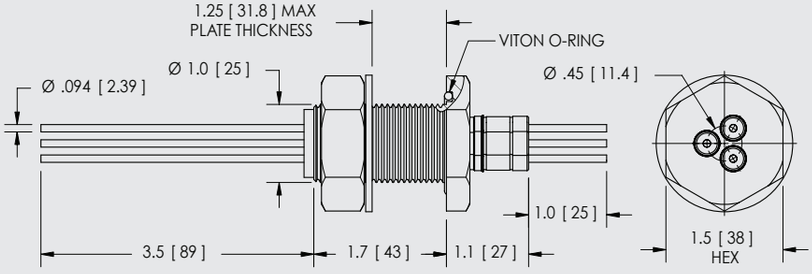

SST Part #	DETAIL	NO. OF PINS	VOLTAGE	CURRENT	CONDUCTOR	INSTALLATION	LIST PRICE
FA13792	Instrumentation/Power Feedthrough	3 Pin	2kV	55 Amp	0.094 Copper	Bolt 1 inch Plug	$229

Baseplate

SST Part #	DETAIL	NO. OF PINS	VOLTAGE	CURRENT	CONDUCTOR	INSTALLATION	LIST PRICE
FA13080	Multipin Connector	10 Pin	700V	4.8 Amp	0.062 Alumel	Bolt 1 inch Without Plug	$327
KT13080	Multipin Connector	10 Pin	700V	4.8 Amp	0.062 Alumel	Bolt 1 inch With Plug	$355
FA13806	Instrumentation/Power Feedthrough	1 Pin	5kV	55 Amp	0.094 Copper	Bolt 1 inch	$142
FA13818	Instrumentation/Power Feedthrough	1 Pin	12kV	185 Amp	0.250 Copper	Bolt 1 inch	$415
FA13804	Instrumentation/Power Feedthrough	1 Pin	12kV	185 Amp	0.250 Copper	Bolt 1 inch With Shield	$455
FA13792	Instrumentation/Power Feedthrough	3 Pin	2kV	55 Amp	0.094 Copper	Bolt 1 inch	$229
FA13792-03	Instrumentation/Power Feedthrough	3 Pin	2kV	16.5 Amp	0.094 Nickel	Bolt 1 inch	$229
FA13792-04	Instrumentation/Power Feedthrough	3 Pin	2kV	3.6 Amp	0.094 304 Stn. Stl.	Bolt 1 inch	$229
FA13940	Instrumentation/Power Feedthrough	4 Pin	2kV	27 Amp	0.050 Copper	Bolt 1 inch	$225
FA12489	Thermocouple Power Type K	1 Pair	5kV	55 Amp	0.094 Copper	Bolt 1 inch With Spade Plug	$325

Tel: (518) 266-6017 / Fax: (518) 266-6013 / info@solidsealing.com
All dimensions are in inches [mm]. Leak rate <1 x 10^{-10} atm-cc/sec (He)

Crystal Sensor

SST Standard Crystal Sensor Specifications

Temperature: -25˚C to 205˚C

Cable Assemblies: to 60 inch length

Sensor Head Microdot Connectors: 3/16″ cooling tubes

Microdot to BNC: coaxial lines

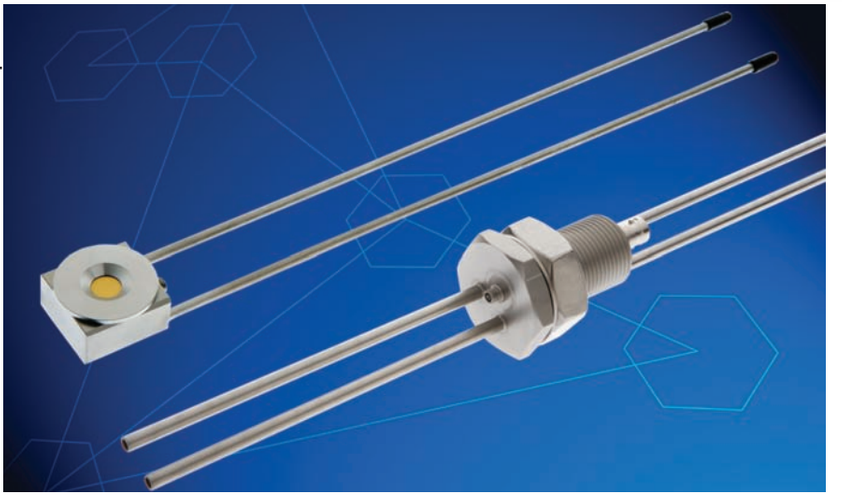

These are just a few examples of SST standard crystal sensor parts. For a complete library of crystal sensor drawings and specifications as well as other SST parts visit **www.solidsealing/parts**

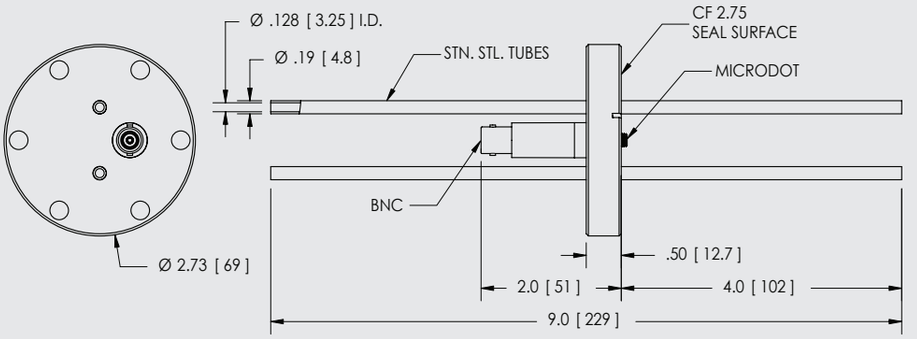

SST Part #	DETAIL	VOLTAGE	CURRENT	CONDUCTOR	INSTALLATION	LIST PRICE
FP12162	Microdot to BNC	500V	2 Amp	2 Cooling Tubes	3/16″ OD CF2.75	$400

Crystal Sensors

SST Part #	DETAIL	VOLTAGE	CURRENT	CONDUCTOR	INSTALLATION	LIST PRICE
FP12162	Microdot to BNC	500V	2 Amp	2 Cooling Tubes 3/16″ OD	CF2.75	$400
FP13094	Microdot to BNC	500V	2 Amp	2 Cooling Tubes .19 OD	KF40	$400
FP13218	Microdot to BNC	500V	2 Amp	2 Cooling Tubes 3/16″ OD	1 inch Bolt	$330
FP13160	Microdot to BNC Connection	500 V	2 Amp	.500 inch dia.	Weld	$215
FP12165	Cable Assembly Microdot	500V	2 Amp	30 inch length	-	$110
FP13592	Cable Assembly Microdot	500V	2 Amp	60 inch length	-	$120
FP12161	Sensor Head Microdot Connection	500V	2 Amp	2 Cooling Tubes .125 OD	Weld	$420

Liquid Feedthroughs

SST Standard Liquid Feedthrough Specifications

Tube: 1/4"
Fittings: Swagelok® and VCR®
RF Power Designs
Temperature: -200˚C to 450˚C
Internal Pressure: 1 x 10^{-10} Torr to 5100 PSIG

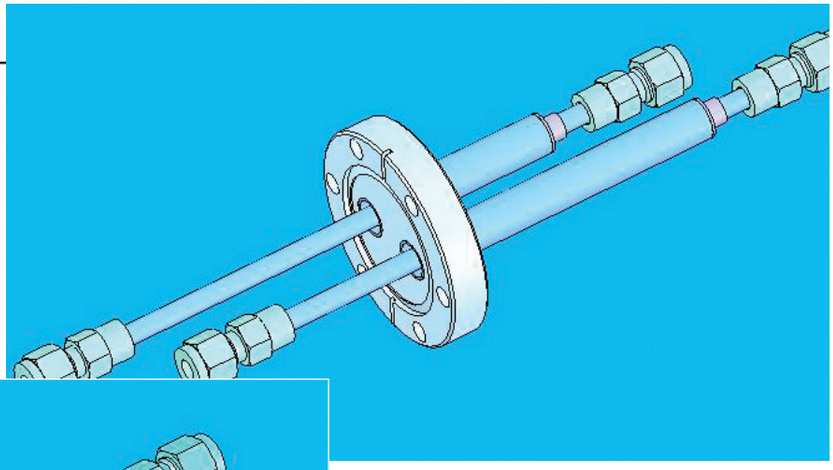

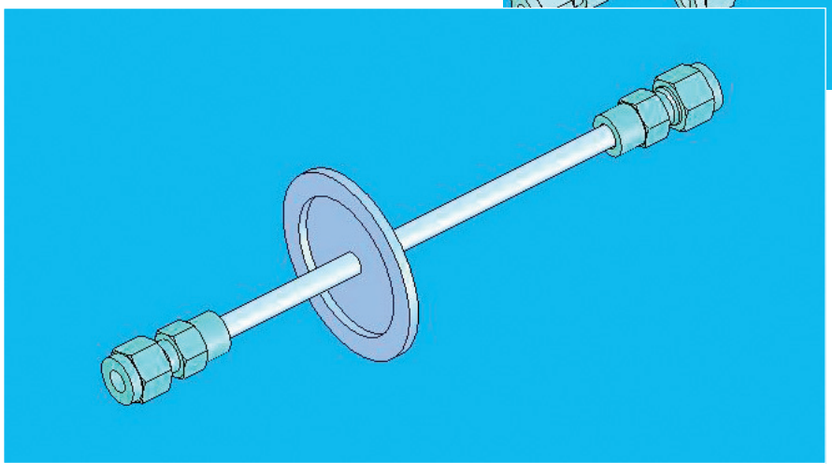

SST uses SolidWorks® 3-D mechanical design software to insure optimum design fitups and to support higher level assembly engineering and design.

These are just a few examples of SST standard liquid feedthrough parts. For a complete library of liquid feedthrough drawings and specifications as well as other SST parts visit **www.solidsealing/parts**

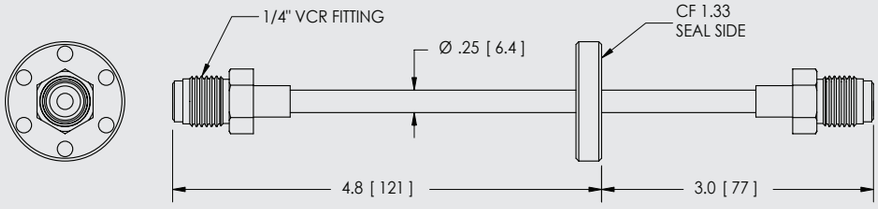

SST Part #	NO. OF TUBES	TUBE SIZE	FITTING	INSTALLATION	LIST PRICE
FA11387	1		VCR	CF1.33	$90

Tel: (518) 266-6017 / Fax: (518) 266-6013 / info@solidsealing.com
All dimensions are in inches [mm]. Leak rate <1 x 10^{-10} atm-cc/sec (He)

Liquid Feedthroughs

Water

SST Part #	NO. OF TUBES	TUBE SIZE	FITTING	INSTALLATION	LIST PRICE
FA11385	1	.25 304 Stn. Stl.	Swagelok®	CF1.33	$90
FA11388	1	.25 304 Stn. Stl.	Swagelok®	CF2.75	$95
FA11383	1	.25 304 Stn. Stl.	Swagelok®	KF25	$80
FA11384	1	.25 304 Stn. Stl.	Swagelok®	KF40	$85
FA11387	1	.25 304 Stn. Stl.	VCR®	CF1.33	$90
FA11386	2	.25 304 Stn. Stl.	VCR®	CF2.75	$150

Nitrogen

FA11389	2	.50 Air Side/.25 Vacuum Side	Swagelok®	CF2.75	$155

RF

SST Part #	CONDUCTOR DIA.	NO. OF CONDUCTORS	VOLTAGE	CURRENT	FREQUENCY	CONDUCTOR MATERIAL	INSTALLATION	LIST PRICE
FA11559	RF Power 0.250	1 Pin	14kV	100 Amp	13.56 MHz	Copper Tube	Weld	$400
FA11563	RF Power 0.250	2 Pin	8kV	100 Amp	13.56 MHz	Copper Tube	Weld	$475
FA14465	RF Power 0.250	2 Pin	8kV	100 Amp	13.56 MHz	Copper Tube	CF2.75	$520
FA14862	RF Power 0.250	2 Pin	8kV	100 Amp	13.56 MHz	Copper Tube	KF40	$520

Accessories

SST Standard Accessories Specifications

Contacts: .032 to .250 inch diameters

Plugs:
- T/C Spade and MIL-C-5015
- Sub D Air Side and PEEK (9, 15, 25, and 50 pin)
- MIL-C-26482 Circular Air Side and PEEK (10, 19, 32, and 41 pin)
- MIL-C-5015 Circular Air Side (2, 4, 6, and 10 pin)
- Coaxial

Plugs and Cables:
- High Voltage 10 kV and 20 kV

These are just a few examples of SST standard accessories. For a complete library of accessories drawings and specifications as well as other SST parts visit **www.solidsealing/parts**

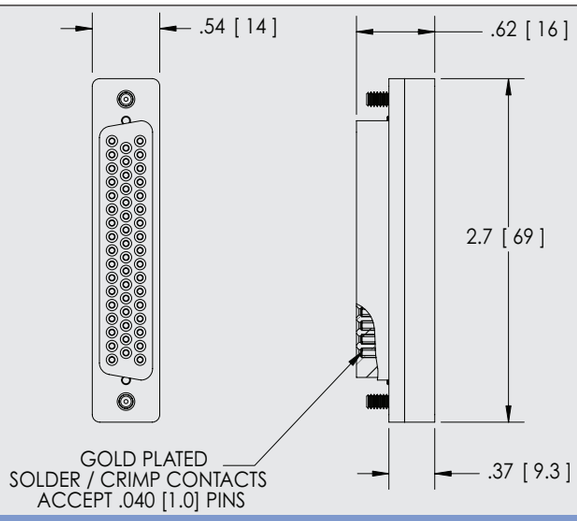

SST Part #	DETAIL	CONDUCTOR	CURRENT	VOLTAGE	LIST PRICE
FA13606	Sub D 50 Pin Peek Plug	Copper Alloy Contacts	15 Amp	500V	$350

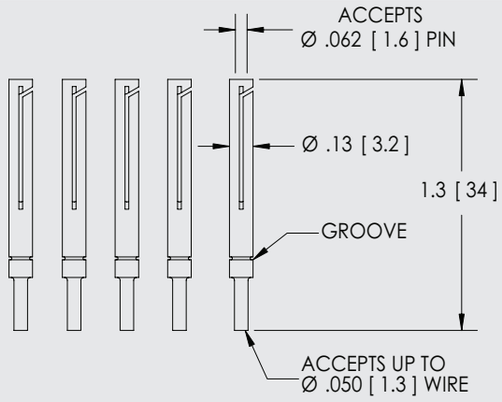

SST Part #	DETAIL	CONDUCTOR	CURRENT	VOLTAGE	LIST PRICE
KT10898	Contacts 5 Per Package	0.062 Chromel®	-	Crimp	$62

Tel: (518) 266-6017 / Fax: (518) 266-6013 / info@solidsealing.com
All dimensions are in inches [mm]. Leak rate <1 x 10^{-10} atm-cc/sec (He)

Cable Assembly

SST Part #	DETAIL	CONDUCTOR	CURRENT	INSTALLATION	LIST PRICE
FP14186	Microdot Cable Assembly	1kV	2 Amp		Contact SST

Contacts

KT13353	Contacts 5 Per Package	0.040 Copper Alloy	15 Amp	Crimp	$8
KT14601	Contacts 5 Per Package	0.040 Copper Alloy	15 Amp	Crimp	$13
KT10898	Contacts 5 Per Package	0.062 Chromel®	-	Crimp	$62
KT10898-02	Contacts 5 Per Package	0.062 Alumel®	-	Crimp	$62
KT12579	Contacts 10 Per Package	0.032 Beryllium Copper	16 Amp	Crimp	$32
KT10900	Contacts 10 Per Package	0.040 Beryllium Copper	20 Amp	Spline Set Screw	$80
KT11564	Contacts 10 Per Package	0.040 Beryllium Copper	13 Amp	Spline Set Screw	$45
KT10902	Contacts 10 Per Package	0.050 Beryllium Copper	25 Amp	Spline Set Screw	$40
KT11565	Contacts 10 Per Package	0.050 Beryllium Copper	20 Amp	Screws Stn. Stl.	$45
KT11566	Contacts 10 Per Package	0.062 Beryllium Copper	20 Amp	Screws Stn. Stl.	$45
KT12528	Contacts 10 Per Package	0.062 Beryllium Copper	20 Amp	Crimp	$35
KT10904	Contacts 10 Per Package	0.094 Beryllium Copper	25 Amp	Spline Set Screw	$40
KT11567	Contacts 10 Per Package	0.094 Beryllium Copper	25 Amp	Screws Stn. Stl.	$45
KT11568	Contacts 10 Per Package	0.125 Beryllium Copper	25 Amp	Screws Stn. Stl.	$55
KT11569	Contacts 10 Per Package	0.154 Beryllium Copper	30 Amp	Screws Stn. Stl.	$80
KT11570	Contacts 10 Per Package	0.250 Beryllium Copper	35 Amp	Screws Stn. Stl.	$90

Plugs – Thermocouple

CP11728	Thermocouple Spade Plug Type K	$6
CP11728-02	Thermocouple Spade Plug Type J	$6
CP11728-03	Thermocouple Spade Plug Type C	$6
CP11728-04	Thermocouple Spade Plug Type E	$6
KT14134	Mil-C-5015 Type K 3 Pair Air Side Plug	$90

Plugs – Sub D Air Side and PEEK Plugs

SST Part #	DETAIL	CONDUCTOR	CURRENT	VOLTAGE	LIST PRICE
KT14876	Sub D 9 Pin Air Side Plug	Copper Alloy Contacts	5 Amp	500V	$8
KT14877	Sub D 15 Pin Air Side Plug	Copper Alloy Contacts	5 Amp	500V	$10
KT14878	Sub D 25 Pin Air Side Plug	Copper Alloy Contacts	5 Amp	500V	$12
KT14879	Sub D 50 Pin Air Side Plug	Copper Alloy Contacts	5 Amp	500V	$18
FA13603	Sub D 9 Pin Peek Plug	Copper Alloy Contacts	15 Amp	500V	$145
FA13604	Sub D 15 Pin Peek Plug	Copper Alloy Contacts	15 Amp	500V	$180
FA13605	Sub D 25 Pin Peek Plug	Copper Alloy Contacts	15 Amp	500V	$215
FA13606	Sub D 50 Pin Peek Plug	Copper Alloy Contacts	15 Amp	500V	$350

Accessories

Plugs – MIL-C-26482 (10, 19, 32, 41 Circular)

SST Part #	DETAIL	CONDUCTOR	CURRENT	VOLTAGE	LIST PRICE
KT14378	Mil-C-26482 10 Pin Air Side Plug	Copper Alloy Contacts	5 Amp	1kV	$55
KT14379	Mil-C-26482 19 Pin Air Side Plug	Copper Alloy Contacts	5 Amp	1kV	$60
KT14380	Mil-C-26482 32 Pin Air Side Plug	Copper Alloy Contacts	5 Amp	1kV	$65
KT14381	Mil-C-26482 41 Pin Air Side Plug	Copper Alloy Contacts	5 Amp	1kV	$80
FA13461	Mil-C-26482 10 Pin Peek Plug	Copper Alloy Contacts	15 Amp	1kV	$102
FA13462	Mil-C-26482 19 Pin Peek Plug	Copper Alloy Contacts	15 Amp	1kV	$136
FA13463	Mil-C-26482 32 Pin Peek Plug	Copper Alloy Contacts	15 Amp	1kV	$153
FA13464	Mil-C-26482 41 Pin Peek Plug	Copper Alloy Contacts	15 Amp	1kV	$174

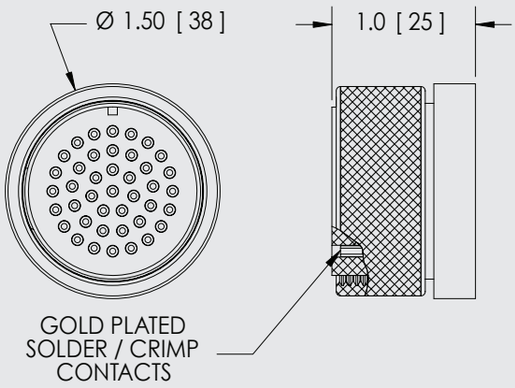

SST Part #	DETAIL	CONDUCTOR	CURRENT	VOLTAGE	LIST PRICE
FA13464	Mil-C-26482 41 Pin Peek Plug	Copper Alloy Contacts	15 Amp	1kV	$174

Plugs – MIL-C-5015 (2, 4, 6, 10 Circular)

KT14249	Mil-C-5015 2 Pin Air Side Plug	0.094 Copper Alloy Contacts	23 Amp	700V	$26
KT11600	Mil-C-5015 4 Pin Air Side Plug	0.062 Copper Alloy Contacts	13 Amp	700V	$28
KT14145	Mil-C-5015 4 Pin Air Side Plug	0.094 Copper Alloy Contacts	23 Amp	700V	$38
KT13803	Mil-C-5015 6 Pin Air Side Plug	0.062 Copper Alloy Contacts	13 Amp	700V	$28
KT13108	Mil-C-5015 10 Pin Air Side Plug	0.062 Copper Alloy Contacts	13 Amp	700V	$28

Plugs – Coaxial

FP10554	SMB Plug	5 Amp	375V	$35
FP10553	SMA Plug	5 Amp	500V	$40
FP10551	BNC Plug	5 Amp	500V	$6
FP10550	MHV Plug	10 Amp	5kV	$11
FP10544	SHV Plug	10 Amp	5kV	$19
FP10548	SHV Plug	10 Amp	10kV	$75
FP10549	SHV Plug	20 Amp	20kV	$125

Plug and Cable

FP10883-02	High Voltage Plug 0.094	26 Amp	20kV	$45
FP10884-02	High Voltage Plug 0.094	26 Amp	10kV	$45

Tel: (518) 266-6017 / Fax: (518) 266-6013 / info@solidsealing.com
All dimensions are in inches [mm]. Leak rate <1 x 10^{-10} atm-cc/sec (He)